AMPEX 300 & 350 SERVICE BULLETINS INDEX WUOM May 19, 1960 (DC)

NO.	DATE	SUBJECT
3	31 Aug 1954	Replacement head procedure ✗
3-01	20 Jan 1958	Installation of gate springs ✗
3-01	20 Mar 1953	Head magnetization ✗
3-02	"	Erase adjustments ✗
3-03	"	~~Threading tape~~ OBSOLETE
3-04	"	Adjustment of AC solenoids (below ser #500)
3-05	"	Capstan oil leakage
3-06	"	~~Meter control panel~~ Redundant
3-07	"	~~Tape slippage~~ INCORPORATED INTO MANUAL Y
3-08	"	Recommended change in filtering for top plate DC supply ✗
3-09	"	Component changes for various serial numbers of 300 ser.
3-10	"	Using 7" RTMA reels ✗
3-11	"	Adapting turntables to use #1917 editing knobs
4-01	9 Jun 1954	Electronic circuit modernization
4-02	17 Aug 1954	Converting rack mount 300 to console mounting
4-03	19 Aug 1954	" console mount 300 to rack mounting
5-02	18 Nov 1959	Capstan idler pressure adjustment (300,350,400A,450) ✗
5-04	18 Nov 1959	Tape tensions on audio machines
6-01	12 Jul 1956	Head assembly cleaning agent Y
6-02	6 Sep 1956	Turntable pin
7-01	8 Apr 1957	Console cabinets
7-02	1 May 1957	~~Brakes, brake bands, and brake band assemblies~~ OBSOLETE
7-03	3 Feb 1959	Dummy erase unit
7-04	14 Mar 1957	Adjusting levels
7-05	1 Oct 1957	Replacement instructions (Cyclohm or Elect. Ind. to Bodine
7-06	15 Mar 1957	Motor lubrication
7-07	15 Mar 1957	Replacement of capstan ass'y
7-08	24 Apr 1957	Conversion of Model 300 to 15-30 ips
7-09	17 Sep 1957	6768 Turntable assembly
8-01	3 Mar 1958	Method of aligning heads without standard tape
~~8-01~~	11 Jun 1958 7-7-58	Conversion of meter control panels
8-02	6 Mar 1958	#9093 reel hold down knob — Alignment tapes
8-02	15 Sep 1958	Changes in drive motor wiring
8-03	1 Aug 1959	Use of high output microphones with Ampex recorders
8-03	16 Sep 1959	Conversion of ¼" tape transports to ½"
8-04	19 Mar 1958	Scales for measuring tensions and brakes
8-04	29 Dec 1958	Converting single channel 300 to multichannel recorders
8-05	22 Dec 1958	Record signal-to-noise
9-02	2 Jun 1959	VU meter replacement
9-03	20 Oct 1959	Brakes, brake band replacement and tension adjustments
9-03	15 Sep 1959	Improving low frequency response in 559 electronics
9-04	7 Dec 1959	Model 300 and duplicator drive motor return springs
9-04	25 Jun 1959	Change in record curves - 559 electronics (monaural)
9-05		Modification of 30750-09 and -10 electronics
9-05	9 Dec 1959	Turntable motor assembly
8-06	20 Sep 1958	Ampex master equalization (AME)

Bulletins marked ✗ have been filed in the appropriate section of the manual.

" " Y have been incorporated into manual

TEST OR OPERATION	ACTUAL	REQUIRED	PROCEDURE
Overall response	15 IPS: + / − ; 7½ IPS: + / −	+2 db 30-15,000 cycles +2 db 40-10,000 cycles	1 Kc input for .123v P/B output (−20 VU) Sweep input from 30-15 Kc (input level constant)
Record noise	_____	Min. P/B noise	1 mfd. capacitor across P/B output and record input shorted. Adjust noise balance control for null with output monitored through a power amplifier.
Overall noise	_____	−60 db	Record input shorted and measured during rerun in P/B mode.
Holdback Tensions			
Supply turntable	_____	8 oz. (Play mode)	Adjust slider on R 801. Hub pulled counterclockwise
Take up turntable	_____	8 oz. (Play mode)	Adjust slider on R 803. Hub pulled clockwise
Brake Tensions *(no power)*			
Supply turntable	_____ _____	7 oz. 14 oz.	Hub pulled clockwise Hub pulled counterclockwise
Take up turntable	_____ _____	14 oz. 7 oz.	Hub pulled clockwise Hub pulled counterclockwise
Capstan speed	_____	Motionless Strobo	Adjust drive motor solenoid spring locknut.
**Construct adaptor to fit erase socket on electronics as indicated:*	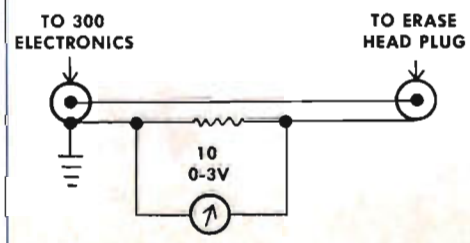		

CHECKOUT CHECK LIST AMPEX CORPORATION *professional products division* **MEASUREMENTS**

DATE _____

MODEL 300

CHECKED BY _____

TEST OR OPERATION	ACTUAL	REQUIRED	PROCEDURE
Clean all heads			FP-7 Cleaner.
Demagnetize heads			#704 Demagnetizer
Playback head alignment	_____	Max. P/B output (15 ips)	#4494 Standard tape and VTVM
Playback level No meter panel	_____	−6 dbm (.388v) P/B output	Standard tape and VTVM Reset electronics P/B level control if necessary
With meter panel	_____	−10 VU, Playback control at 14	Standard tape and VTVM Reset electrrnics P/B level control if necessary
Playback response	+_____ −_____	±2 db 30 to 15,000 cycles (P/B output)	Standard tape and VTVM
Erase	_____	180 Ma	Only necessary when full erasure not made. Adjust erase trimmer for 1.8v reading across 10 ohm resistor *. (Changing erase current requires readjustment of bias circuit.)
Record level No meter panel	_____	+4 dbm (1.23v) P/B output	1Kc at 1.23v (audio input) Reset electronics record level control if necessary.
With meter panel	_____	O VU P/B output record control set at 14 (Bridging meter panel) or "O" (Matching meter panel).	Input as above. Reset electronics record level control if necessary.
Bias	_____	Max. P/B output	1 Kc at 1.23v (audio input) Adjust bias control. Reset electronics record level control if necessary for proper record level after bias adjustment.
Record head alignment	_____	Max. P/B output (15 ips)	15 Kc at .388v (audio input) Set meter panel P/B control at 4 for best reading.

AMPEX CORPORATION
professional products division
934 CHARTER ST. · REDWOOD CITY, CALIF. · EMERSON 9-1481 · TWX REDWOOD CITY, CAL 41 · CABLE ADDRESS: AMPEX, REDWOOD CITY

SERVICE BULLETIN

Date: May 18, 1959
Model: 300
Bulletin No: Index
Page No: 1

New No.	Old No.	Date of Issue	Subject	Remarks
3-01	1	20 Mar. 1953	Head Magnetization	✓
3-02	2	20 Mar. 1953	Erase Adjustment	✓
3-03	3	20 Mar. 1953	Threading Tape	✓
3-04	4	20 Mar. 1953	Adjustment of AC Solenoids	✓
3-05	8	20 Mar. 1953	Capstan Oil Leakage	✓
3-06	9	20 Mar. 1953	Meter Control Panel	✓
3-07	10	20 Mar. 1953	Tape Slippage	✓
3-08	15	20 Mar. 1953	Filtering DC Supply	✓
3-09	16	20 Mar. 1953	Component Changes	✓
3-10	20	20 Mar. 1953	Using 7" RTMA Reels	✓
3-11	21	20 Mar. 1953	Adapting Turntables for 1917 Knobs	✓
4-01	19	9 June 1954	Electronic Circuit Modification	✓
4-02	22	17 Aug. 1954	Converting Rack to Console	✓
4-03	23	19 Aug. 1954	Converting Console to Rackmount	✓
7-01	5	8 Apr. 1957	Console Cabinets	✓
7-02	6	1 May 1957	Brake Adjustments & Brake Band Replacements	✓
7-03	27	27 Nov. 1957	Dummy Erase Unit	✓
7-04	13	14 Mar. 1957	Adjusting Levels	✓
7-05	14	1 Oct. 1957	Replacing Cyclohm or Elec. Indicator Motors	✓
7-06	17	15 Mar. 1957	Motor Lubrication	✓
7-07	24	15 Mar. 1957	Replacement of Capstan Assemblies	✓
7-08	25	24 Apr. 1957	Converting to 15/30 ips	✓
7-09	26	17 Sept. 1957	6768 Turntable Motor	✓
8-01	28	11 June 1958	Conversion of Meter Control Panels	✓
8-02	29	15 Sept. 1958	Changes in Drive Motor Wiring	✓
8-03	30	16 Sept. 1958	Converting to 1/2" Transport	✓
8-04	31	12 Dec. 1958	Converting to Multichannel Recorders	✓
9-03		15 SEP 1959	Improving LF record response 559 electronics	✓
9-04		25 JUN 1959	Changes in record curve	✓
0-01		15 JUL 1960	Typical signal voltages, model 300 CAT 559	✓

Old #7, #11, #12, #18 and #27 are obsolete or have been replaced by another bulletin.

SERVICE BULLETIN

AMPEX

AUDIO PRODUCTS DIVISION • AMPEX PROFESSIONAL PRODUCTS COMPANY

DATE 15, July 1960
MODEL 300
BULLETIN NO. 0-01
PAGE NO. 1 of 2

TYPICAL SIGNAL VOLTAGES, MODEL 300 ELECTRONICS
CATALOG NUMBER 559

All voltages noted are referenced to ground except as noted and are measured with a VTVM having an input resistance of at least 10 megohms. The voltages obtained in a properly operating amplifier should be within about 10% of the typical values.

Reproduce amplifier circuit conditions:

1. Test circuit connected as shown for electronics response check in maintenance manual.

2. Level control set for maximum output.

3. Oscillator output .82V at 500 CPS.

Check point	Voltage
Pin C, J201 (head input jack)	.00082V
Pin 4, V201 (grid)	.00082V
Pin 8, V201 (plate)	.0084V
Cap, V203 (grid)	.0084V
Pin 3, V203 (plate)	.155V
Pin 1, V204 (grid)	.155V
Pin 4, V204 (grid)	.155V
Pin 2, V204 (plate)	2.3V
Pin 5, V204 (plate)	2.3V
Pin 1, V205 (grid)	2.3V
Pin 4, V205 (grid)	2.3V
Pin 2, V205 (plate)	25V
Pin 5, V205 (plate)	25V
Pin 1 to Pin 6 of T-201 (output transformer)	7V

Record amplifier circuit conditions:

1. Test circuit connected as shown for electronics response check shown in maintenance manual.

2. Bias oscillator tube removed.

3. Level control set for maximum gain.

4. Oscillator output .241V at 400 CPS

Check point	Voltage
"G" on T101	.241V
Pin 5, V101 (grid)	.241V
Pin 3, V101 (plate)	3.7V
Pin 5, V102 (grid)	.15V
Pin 3, V102 (plate)	2.2V
Pin 1 & 4, V103 (grids)	2.2V
Pin 2 & 5, V103 (plates)	.75V

TYPICAL SIGNAL VOLTAGES, MODEL 300 ELECTRONICS
CATALOG NUMBER 559

All voltages noted are referenced to ground except as noted and are measured with a VTVM having an input resistance of at least 10 megohms. The voltages obtained in a properly operating amplifier should be within about 10% of the typical values.

Reproduce amplifier circuit conditions:

1. Test circuit connected as shown for electronics response check in maintenance manual.
2. Level control set for maximum output.
3. Oscillator output .8V @ 500 CPS.

Check point	
Pin C, J201 (head input jack)	.00082V
Pin 4, V201 (grid)	.00082V
Pin 8, V201 (plate)	.0084V
Cap, V203 (grid)	.0084V
Pin 3, V203 (plate)	.155V
Pin 1, V204 (grid)	.155V
Pin 4, V204 (grid)	.155V
Pin 2, V204 (plate)	2.3V
Pin 5, V204 (plate)	2.3V
Pin 1, V205 (grid)	2.3V
Pin 4, V205 (grid)	2.3V
Pin 2, V205 (plate)	25V
Pin 5, V205 (plate)	25V
Pin 1 to Pin 6 of T-201 (output transformer)	7V

Record amplifier circuit conditions:

1. Test circuit connected as shown for electronics response check shown in maintenance manual.
2. Bias oscillator tube removed.
3. Level control set for maximum gain
4. Oscillator output .241V @ 400 CPS

Check point	Voltage
"G" on T101	.241V
Pin 5, V101 (grid)	.241V
Pin 3, V101 (plate)	3.7V
Pin 5, V102 (grid)	.15V
Pin 3, V102 (plate)	2.2V
Pin 1 & 4, V 103(grids)	2.2V
Pin 2 & 5, V 103(plates)	.75V

SEE ALSO SERVICE BULLETIN 0-01 15 July 1960

AMPEX CORPORATION
professional products division

SERVICE BULLETIN

934 CHARTER ST. · REDWOOD CITY, CALIF. · EMERSON 9-7111 · TWX REDWOOD CITY, CAL 41 · CABLE ADDRESS: AMPEX, REDWOOD CITY

HEAD MAGNETIZATION

In order to realize the full dynamic range of tape, it is extremely important that the heads be free of permanent magnetization. Tape is very sensitive to the slightest amount of magnetization on the record head, so that unless care is exercised it is very easy to raise the noise level 5 to 10 db and ruin good tapes by partially erasing high frequencies. Ampex recorders have been designed so that with normal and proper usage, the heads will not become magnetized. However, it must be remembered that any phenomena which tends to put an unbalanced pulse through the record head will magnetize it. If the following precautions are taken, no difficulty should be experienced.

a. DO NOT DEPRESS THE RECORD BUTTON UNTIL AFTER DEPRESSING THE START BUTTON. This allows the transient caused by switching the motors and solenoids to die out before the record head is connected. A one-half second pause is sufficient.

b. Do not pull any tubes in the record amplifier, or connect head leads or input leads, while the machine is in the Record position. In some cases it has been found wise not to start or stop recording while there is a saturating signal fed into the record amplifier.

c. Do not switch speeds while recording. No harm is done by changing speeds while playing back. The magnetization of the record head which occurs when the Speed Change Switch is operated while recording can be eliminated by placing a 100,000 ohm resistor across terminals 9 and 10 on the back of connector J104P in the Record amplifier. See fig. 6 of the Instruction Book.

d. Do not saturate the record amplifier with abnormally high input signals. Such signals would be 10 db greater than tape saturation or approximately 30 db greater than normal operating level.

e. Do not test continuity of the heads with an ohm meter.

Should the heads become magnetized, they can be demagnetized readily with an AMPEX Head Demagnetizer (Catalog 704). The following demagnetization procedure should be performed: Throw the Power switch OFF. Plug the Demagnetizer into a 117 volt AC source. Bring the tips of the demagnetizer in close proximity to, but preferable not in contact with, the head core stack. If the tips of the demagnetizer are not plastic coated a small piece of electrical tape folded over the tips will prevent scratching the head core. Run the tips of

Insert following IV, P.6

the demagnetizer up and down the entire length of the core stack (the tips should straddle the gap) three or four times. Remove the demagnetizer very slowly allowing the influence of its AC field to die off gradually. This operation should be performed on all three heads. In the event demagnetization is not effected, repeat the process several times.

Should the Capstan or tape guides become magnetized through contact with some magnetized object, a few passes up and down their length with the head demagnetizer and then slow withdrawal should suffice to demagnetize them.

AMPEX CORPORATION
MAGNETIC RECORDERS
934 CHARTER ST. • EMERSON 8-1471
TWX REDWOOD CITY CAL 41
CABLE ADDRESS: AMPEX, REDWOOD CITY
REDWOOD CITY, CALIFORNIA

PROFESSIONAL PRODUCT
SERVICE BULLETIN
DATE: 20 March 1953
MODEL: 300 Series
BULLETIN NO: 4 3-04

ADJUSTMENT OF AC SOLENOIDS ON RECORDERS BELOW SER. NO. 500

Some difficulty has been experienced with the humming or buzzing of the #020-005 AC solenoid which operates the capstan idler, K501. Investigation of the cause of this noise has disclosed that if the linkage has not been adjusted properly, the force required of the solenoid will be greatly increased and therefore cause it to hum.

Looking at the drive assembly from the bottom, the linkage of the capstan idler solenoid can be seen. The link rod A passes through a hole in the arm B that it operates, and there is a rubber washer (C) and adjusting nut (D) on the end. When the solenoid is operated, the rod pulls the rubber washer against the arm to operate it. When the solenoid is seated, the angle E between the rod and the arm should be less than 90°. If this is so, the effective contact point of the washer is on the outside. If the angle between the rod and the arm is greater than 90° when the solenoid is seated, the contact point of the washer on the arm is on the inside, effectively reducing the moment arm by a considerable amount, and therefore requiring much greater force to be exerted by the solenoid.

The importance of maintaining the above angle E below 90° was only recently discovered, and it is possible that some machines have been shipped in which this angle might be too great. While no machines have been shipped with noisy solenoids, it is possible that if the above adjustment is not proper the solenoids may become noisy in use. Should this be the case, the adjustment can be corrected as follows:

It will be noted that the capstan idler arm shaft F is connected to the operating shaft G below through a U-shaped torque link H. If the bottom (or shorter) arm of this link H is bent in a clockwise direction (when looking at the link from the bottom or short arm end), this will effectively reduce the angle E. In order to bend this arm, it is necessary to remove link H and hold it in a vice. The link can be removed by forcing off the spring-lock washers which position the lower arm (I and J) and which attach the return spring at the top (K). The proper value for the angle E is approximately 86°, or when the arm B is perpendicular to the plane of the solenoid base plate.

If the angle E is changed, it will be necessary to re-set the capstan idler adjustment D. This adjustment is set so that when the capstan idler just touches the capstan, the solenoid is 1/8 inch shy of seating. A simple way of making this

Insert at IV, P. 4

setting is to place a piece of material 1/8 inch thick between the solenoid armature and body and clamp the armature down on it. Then tighten the nut D until the capstan idler just touches the capstan.

It may also be necessary to reset the capstan idler solenoid Stop L. This stop should be set so that at no time during fast winding does the tape touch the capstan idler.

	Part No.
A	396-2
B	381
C	(3/16 ID x 5/8 OD x 1/8 thk)
D	(ESNA #10-32)
E	(86° ± 2°)
F	372
G	397
H	393
I	430-040
J	430-040
K	365
L	388

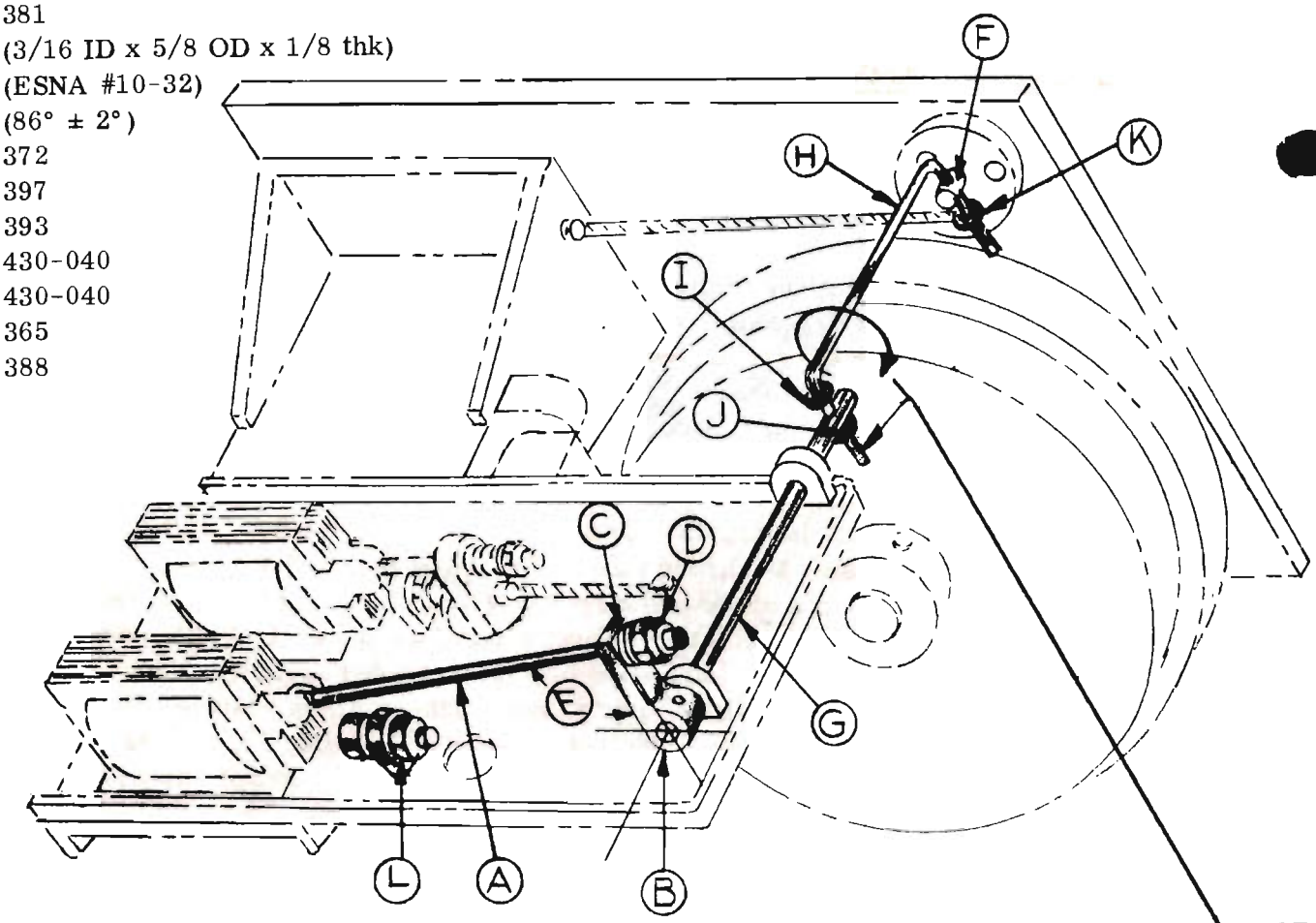

ANGLE E MUST BE LESS THAN 90° WHEN CAPSTAN SOLENOID IS SEATED.

TO REDUCE ANGLE E, BEND THIS ARM CLOCKWISE WITH RESPECT TO UPPER ARM. RESET ADJUSTING NUT D & L.

AMPEX CORPORATION
professional products division

SERVICE BULLETIN

934 CHARTER ST. · REDWOOD CITY, CALIF. · EMERSON 9-1481 · TWX REDWOOD CITY, CAL 41 · CABLE ADDRESS: AMPEX, REDWOOD CITY

20 March 1953
300
3-05
1

1. Capstan Oil Leakage. There is a tendency for oil to climb out of the capstan bearing housing during the first few weeks of operation. The capstan bearing has been thoroughly impregnated with oil so as to drive out any air inclusions, as the presence of air would tend to force oil out of the bearing housing when it becomes warm. The excess oil present climbs up the capstan when the machine is operated. Ordinarily, this oil is caught by the felt washer on top of the bearing housing. (The neoprene washer shown in fig. 2 of the instruction book was eliminated in production because it produced flutter.) If this washer becomes saturated with oil, which usually happens, then it will no longer behave as an effective seal. Therefore after the first week or so of operation, when most of the excess oil has had a chance to work out, the felt washer should be removed and washed out in carbon tetrachloride. Simply remove the capstan dust cap (see fig. 2, instruction book) to remove the felt washer. If this washer is kept reasonably dry, then no trouble should be experienced with oil creeping up the capstan.

20 March 1953
300
3-05
2

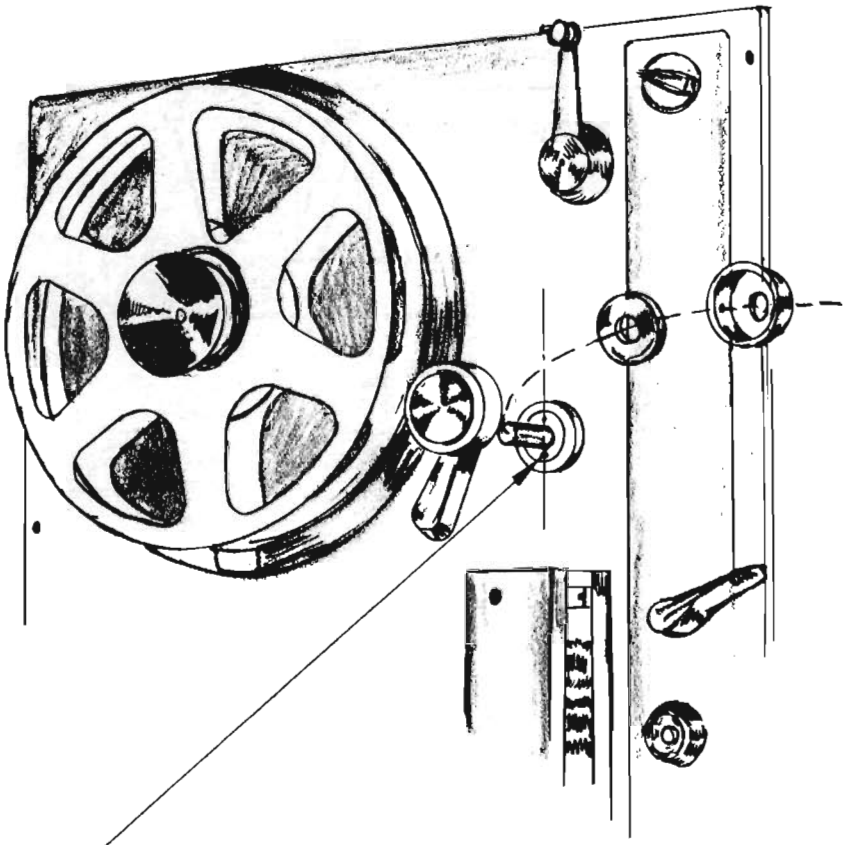

REMOVE CAPSTAN DUST COVER & FELT WASHER AS SHOWN POSITION CAPSTAN ASSEM. SO THAT CENTER LINE BETWEEN BOTH HOLES IS VERTICAL WITH LARGE C'SK HOLE ON THE BOTTOM AS SHOWN. IF CAPSTAN SHOULD NEED POSITIONING SEE SVC. BULL. #14
TAP 6-32 N.C. IN LARGE C'SK HOLE
INSERT 6-32 X 1/4 LG. FLAT HD. MACHINE SCREW.

PLUGGING OF CAPSTAN OIL HOLE ON RACK MOUNTED UNITS

AMPEX CORPORATION
MAGNETIC RECORDERS
934 CHARTER ST. • EMERSON 8-1471
TWX REDWOOD CITY CAL 41
CABLE ADDRESS: AMPEX, REDWOOD CITY
REDWOOD CITY, CALIFORNIA

PROFESSIONAL PRODUCT

SERVICE BULLETIN

DATE: 20 March 1953
MODEL: 300 Series
BULLETIN NO: ~~15~~ 3-08
PAGE NO: 1 of 1

RECOMMENDED CHANGE IN FILTERING FOR THE TOP PLATE DC SUPPLY
Serial Numbers 500 to 1900.

There have been several instances in which failures of the DC voltage operating the relays and solenoids on the 300 recorders have occurred. Most of these failures are due to a gradual decrease in the capacity of the 80 mfd 150 volt filter condenser for this supply. This condenser, schematic reference C805, is located on the underside of the top plate next to the selenium rectifier.

To eliminate this problem, we have incorporated a second 80 mfd 150 volt condenser in parallel with C805.

It is recommended that this additional condenser be incorporated in all machines exhibiting this failure. This change has already been incorporated in machines with serial numbers higher than 1900.

ret #1, 3 only

AMPEX CORPORATION
professional products division

SERVICE BULLETIN

934 CHARTER ST. · REDWOOD CITY, CALIF. · EMERSON 9-1481 · TWX REDWOOD CITY, CAL 41 · CABLE ADDRESS: AMPEX, REDWOOD CITY

COMPONENT CHANGES FOR VARIOUS SERIAL NUMBERS OF 300 SERIES RECORDERS

1. Models 300, 301, 302 below serial number 500 used various combinations of two pole and three pole top plate control relays K401 and K402. All can be replaced with three pole relays, catalog number RL-34.

2. Some Models 300,301, and 302 below serial number 800 used a 7500 ohm, 50 watt adjustable resistor as R120 in the erase oscillator + B loading circuit. RE-244, 6000 ohm, 40 watt resistor, will satisfactorily replace the early type.

3. Models 300, 301, 302 below serial number 300 (approximately) incorporate a spanner nut for mounting the reel idler. Catalog number 354 reel idler will not directly mount on these machines. Replacements for this group should be ordered as catalog number 354-F.

4. The following changes are effective at serial number 500:

   a. Top plate control circuit revised to incorporate DC rather than AC relays and solenoids.
   b. Head cable connections modified.
   c. Takeup tension arm modified.
   d. Safety switch modified.

   These replacement components for recorders with serial numbers lower and higher than 500 are not interchangeable. Refer to the parts list for proper components.

5. Model 300's drive motors were changed from catalog number 641 Cyclohm, or catalog number 496 Electric Indicator, to catalog number 1030 Bodine motors. Models 301 and 302 drive motors were changed from catalog number 629 Electric Indicator, to catalog number 1075 Bodine.

6. The equalization components used in the playback amplifier were changed on Model 300's with serial numbers higher than 886. The correct components for recorders above and below this number can be identified from the parts list.

7. Model 300 record amplifiers with serial numbers higher than 891 incorporate a relay in the record amplifier allowing use of extended range head. Also added were condensers C123, C125, and C126. C109 and C110 were changed. C121 and R126 were changed.

8. The drive assembly mounting plate in all series 300 recorders was changed from a flat plate to a stiffening casting on machines with serial numbers above 1800.

9. Second electrolytic condenser C806 added beginning with serial 1901. (In Model 307, added beginning serial 1801.)

10. Suppressor condensers C807, C808, and C809 added to suppress starting and stopping transients effective, serial 2501.

11. AC outlet for fan added beginning serial 2101.

12. Erase coupling condenser C119 changed to .002 mfd effective serial 2103.

13. Oscillator circuitry changed effective serial 1850.

14. Record and playback head gaps changed to 1 mil and $\frac{1}{4}$ mil respectively, effective Serial 1605.

15. Capstan diameter changed effective serial 2501.

16. Condenser C109 changed to .0035 mfd. C110 changed to .002 mfd effective serial 2912.

AMPEX CORPORATION
professional products division

SERVICE BULLETIN

934 CHARTER ST. · REDWOOD CITY, CALIF. · EMERSON 9-1481 · TWX REDWOOD CITY, CAL 41 · CABLE ADDRESS: AMPEX, REDWOOD CITY

DATE: 20 March 1953
MODEL: 300
BULLETIN NO. 3-10
PAGE NO: 1

USING 7" RTMA REELS

Although the 300 series recorders were designed to use 10½" NARTB reels, they will play 7" reels if the takeup and rewind torques are corrected. To make these corrections, the following parts are required:

(2) 150 ohm 50 watt resistor, catalog #RE-131
(1) Double Pole Single Throw Toggle Switch, Catalog SW-4

Center the toggle switch 1 3/4" from the rear of the top plate. Wire according to diagram below:

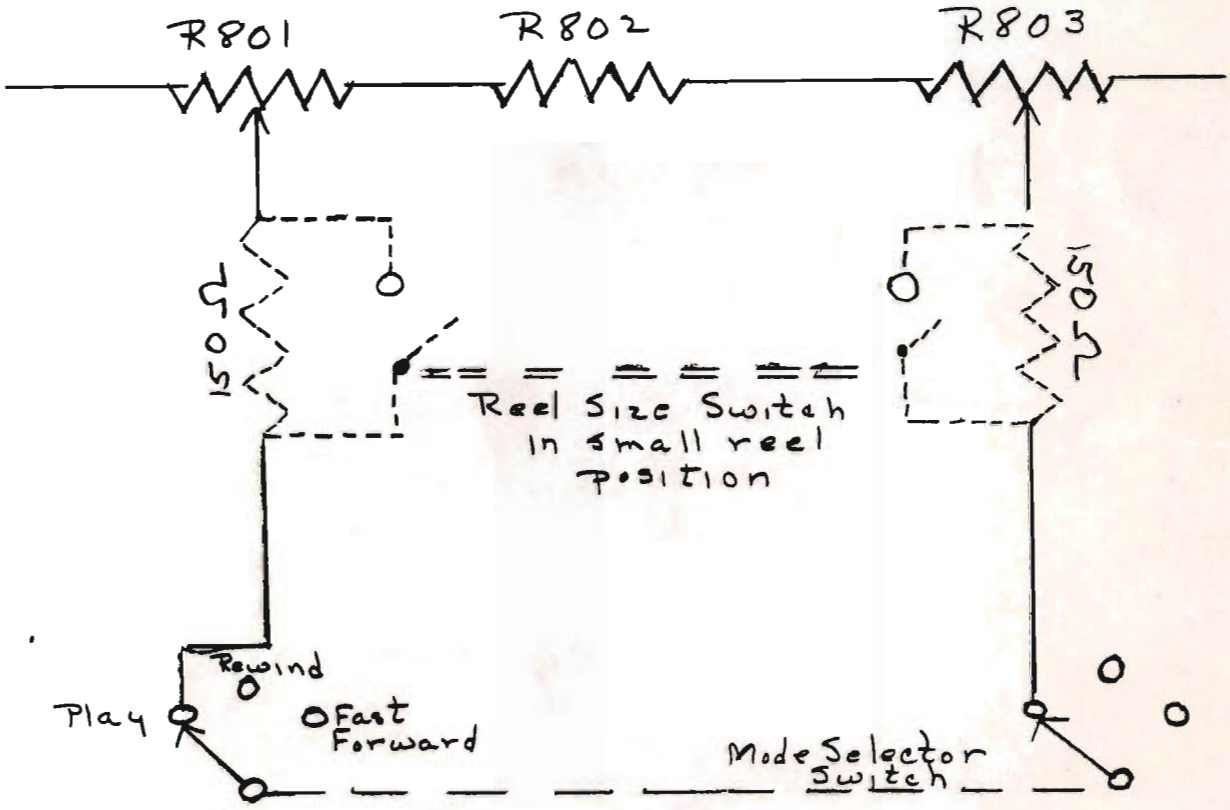

AMPEX
CORPORATION
MAGNETIC RECORDERS
934 CHARTER ST. • EMERSON 8-1471
TWX REDWOOD CITY CAL 41
CABLE ADDRESS: AMPEX, REDWOOD CITY
REDWOOD CITY, CALIFORNIA

PROFESSIONAL PRODUCTS

SERVICE BULLETIN

DATE: 20 March 1953
MODEL: 300
BULLETIN NO: ~~21~~ 3-11
PAGE NO: 1

ADAPTING TURNTABLES TO USE CATALOG #1917 EDITING KNOBS ON EARLY MACHINES

If it is desired to use the new editing knob assemblies, catalog #1917, with a Model 300 recorder which does not have the holes drilled in the turntable, the attached drawing will serve as a template diagram for drilling these holes.

When drilling these holes care should be taken that metal filings do not fall into the end-bell of the turntable motor. This can be accomplished by wrapping a cloth around the end-bell on the under side of the top plate while drilling.

20 March 1953
300
21
2

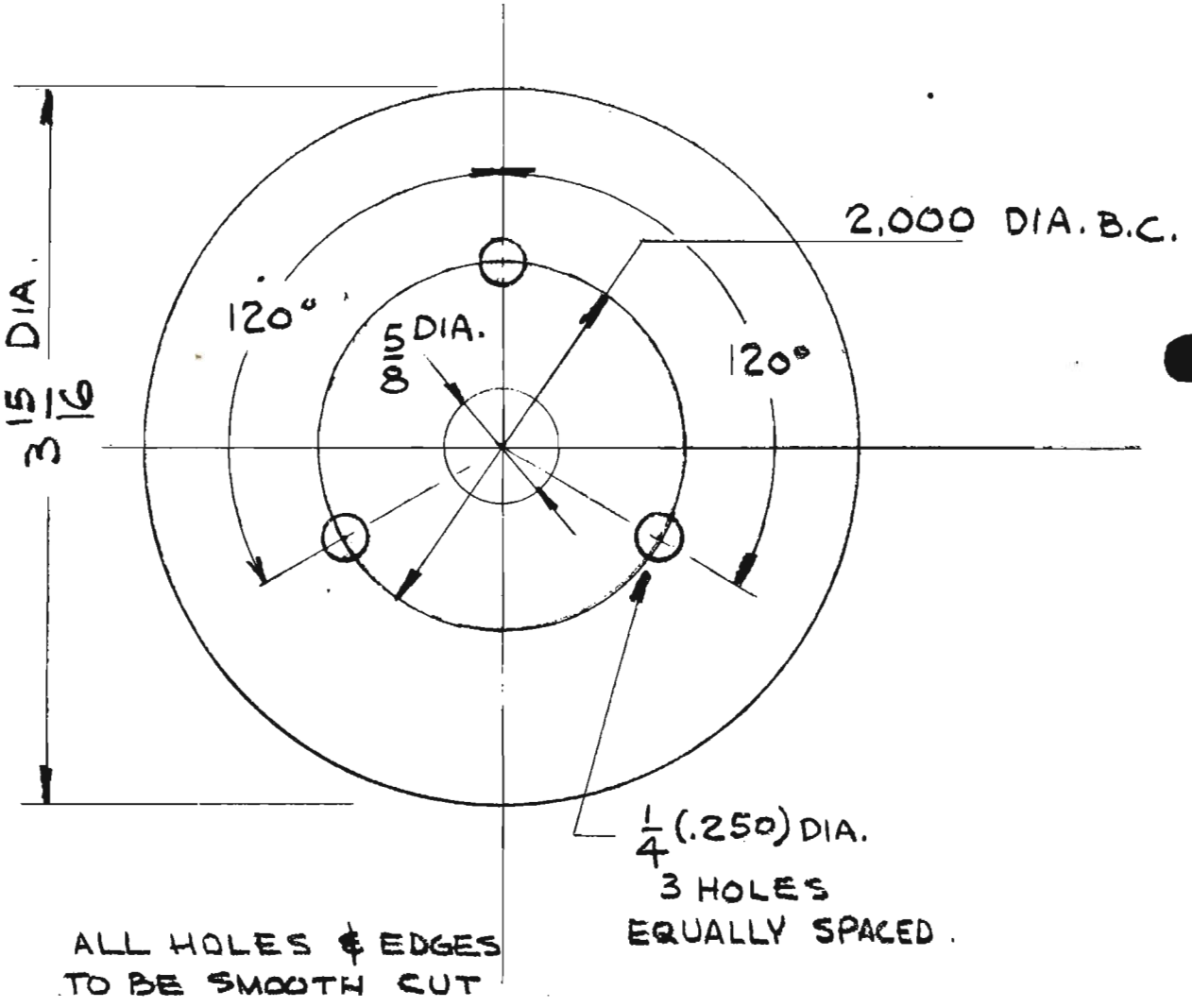

AMPEX
ELECTRIC CORPORATION
MAGNETIC RECORDERS
934 CHARTER ST. • EMERSON 8-1471
TWX REDWOOD CITY CAL 41
CABLE ADDRESS: AMPEX, REDWOOD CITY
REDWOOD CITY, CALIFORNIA

SERVICE BULLETIN
DATE: 9 JUNE 1954
MODEL: 300
BULLETIN NO: ~~13~~ 4-01
PAGE NO: 1

ELECTRONIC CIRCUIT MODERNIZATION

A. During the several years that the Model 300 has been in production a number of improvements have been made in the quality of recording tape. This has necessitated various production changes in this model in order to take full advantage of the improved characteristics of the newer tapes. Throughout all these changes, however, the "tape characteristic" has been retained. "Tape characteristic" is the term used to describe the actual signal that is recorded on the tape; for example, an inefficient record head would have to have an entirely different equalization curve in order to record the same actual signal on the tape than would a head having very efficient record characteristics. Both heads however would record exactly the same actual signal on the tape even though the equalization curves for the two heads were different. This explains how even though our record curves have changed in later models from those used in earlier models, the actual signal recorded on the tape has been kept constant. The same principal holds true in the case of playback heads and for this reason the later type heads require a slightly different equalization curve than did those in earlier models. In accordance with the above a tape recorded on an early model machine will play back on a later model machine almost identically with a tape both recorded and played back on the later model machine.

B. These newer tapes now require that the current production Model 300 be biased to peak at 1,000 cycles in order to operate at the lowest distortion level and to reduce high frequency saturation effects.

C. Because of "B" above, the record equalization has been changed slightly to very closely maintain the established "tape characteristic".

D. Biasing as in "B" above, also provides extended range $7\frac{1}{2}$" performance with the use of the new head assembly and the extended range $7\frac{1}{2}$" equalizer.

E. Again, it should be stressed that even though the equalization and bias adjustments have been changed, the net result is that the previously established "tape characteristic" has been maintained and that at the 15" tape speed there is still complete interchangeability of tapes between the earlier machines and the current production models.

F. If the earlier Model 300 recorders are to be converted to take full advantage of the improved performance possible with present tapes and also to have extended range $7\frac{1}{2}$" response, the following changes in the record and playback electronics will have to be made depending upon the serial number category of the

AMPEX
ELECTRIC CORPORATION
934 CHARTER ST. • EMERSON 8-1471
TWX REDWOOD CITY CAL 41
CABLE ADDRESS: AMPEX, REDWOOD CITY
REDWOOD CITY, CALIFORNIA

MAGNETIC RECORDERS

SERVICE BULLETIN

DATE:
MODEL: 300
BULLETIN NO: ~~19~~ 4-01
PAGE NO: 2

recorder:

SERIALS 100 through 175

1. The playback equalization circuitry in the grid stage of V203 must be changed to that circuitry shown on the attached playback amplifier diagram. Discard the old R207, 470,000 ohm resistor. The new R207 is a 5,000 ohm potentiometer, Ampex Catalog #RE-273. Discard the old C206, a .006 condenser and substitute the new C206, a .036 condenser, Ampex Catalog #CO-111. Rewire these parts in accordance with the playback amplifier schematic attached.

(Refer to record amplifier diagram for the following steps)

2. In the record amplifier, R106 must be changed to a ~~39,000~~ 33,000 ohm ± 5% 1 Watt resistor. This resistor is Catalog ~~#RE-44.~~ 041-113

301 See over 3. Condenser C123, a 100 MFD 50 volt condenser, Catalog #CO-63, must be added as shown on diagram.

301 See over 4. Relay K102, Catalog #RL-2, should be added as shown. On J104P jumper terminals 1 and 9. Lead from R122 to terminal 2 on J105 should be re-connected to terminal 10 on J104-P. Disconnect lead to terminal 10 on J104-P from C109 (for this change compare new schematic with schematic furnished with original instruction book). (see over)

301 See over 5. Wire lead from bottom side of L101 to one outside rotor contact of ~~J102.~~ K102 NO (see over.) Connect to stator contacts of this section of the relay the new C109, Catalog #CO-10, and C110, Catalog #CO-21, condensers as shown.

301 See over 6. Connect rotor of other outside relay section to the point between C102 and R105. Add the new trimmers C125 and C126, both bearing Catalog #CO-92, to stator contacts of this section as shown on attached diagram.

301 7. Replace R105 with a ~~1 Megohm~~ 470K, 1w resistor, Catalog ~~#RE-32.~~ 041-124

301 See over 8. Center pole of relay K102 is not used. Ground both stator contacts and rotor so that this pole will act as an isolation shield between the other two poles.

301 9. Replace C121 with a ~~.005~~ .0005 MFD 500 volts Mica condenser, Catalog #CO-5.

301 10. Replace R126 with 10,000 ohm potentiometer, Catalog #RE-255.

#3 / physically placed at end of TS 101 (had been installed)

#4 / Jumper 1 (gnd ⏚) to 9, remove existing ground wire from 9. R122 is OK as is. (had been changed)

#5 / C110 change to .002 (5%). Remove R128. L101 & C110 connect as shown on 301 schematic ED1093. APPLIES TO 301 MODELS ONLY. (See #15 below)

Spec / C105 is shorted for 30" recordings. The relay (K102) pole nearest the coil is connected to do this already.

#6 / Relay rotar already connected. C126 is installed (physically) in place of R205. Connect as shown on schematic ED1093.

#7 / as given

#8 / ground all unused contacts on 3rd relay section.

#14 / C109 not used on model 301

#15 / C110 is changed to .002 (see #5 above)

AMPEX
ELECTRIC CORPORATION
MAGNETIC RECORDERS
934 CHARTER ST. • EMERSON 8-1471
TWX REDWOOD CITY CAL 41
CABLE ADDRESS: AMPEX, REDWOOD CITY
REDWOOD CITY, CALIFORNIA

11. Replace head assembly with later type having 1 mil record head gap and 1/4 mil playback head gap. Machines manufactured prior to serial number 1605 were supplied with a record head having a 2 mil gap and a playback head having a 1/2 mil gap. The later type head makes possible response at the $7\frac{1}{2}$" tape speed to 15,000 cycles.

301 ~~300~~ 12. Replace C119 with .002 MFD 500 volt Mica condenser, Catalog #CO-21.

301 ~~300~~ 13. When installing new head assembly, the erase current should be reduced from 250 ma. to 150-175 ma. by means of erase trimmer C120. Erase current can be determined by inserting a 10 ohm resistor in series with a ground lead of the erase head and measuring the voltage drop across the resistor. This measurement can be facilitated by ordering an adaptor plug, Catalog #PL-37S.

300 160ma

±14 not changed ← see note on p. 4

~~300 14. C109 becomes a .0035 MFD 500 volt Mica condenser, Catalog #CO-10. (was .005)~~ 7½

301 ~~300~~ ~~15. C110 becomes a .002 MFD 500 volt Mica condenser, Catalog #CO-21. (was .0035)~~ 15

See notes

SERIALS 176 through 885

1. Make all changes outlined for serial number category "100 through 175", ~~excepting step 2.~~

SERIALS 886 through 890

1. Make all changes outlined for serial number category "100 through 175", excepting steps 1 and 2.

SERIALS 891 through 1604

1. Perform only steps 11 through 15 outlined in serial number category "100 through 175".

SERIALS 1605 through 2912

1. Perform only steps 14 and 15 outlined in serial number category "100 through 175".

GENERAL

After having made all the necessary above changes the record bias should be set. Feed a 1,000 cycle tone into the recorder input and while recording adjust the bias control to peak playback output as read on the VU meter. Realign the heads, both record and playback, by means of the Ampex standard alignment tape,

AMPEX
ELECTRIC CORPORATION
MAGNETIC RECORDERS
934 CHARTER ST. • EMERSON 8-1471
TWX REDWOOD CITY CAL 41
CABLE ADDRESS: AMPEX, REDWOOD CITY
REDWOOD CITY, CALIFORNIA

Catalog #4494 and then re-equalize both the record and playback amplifiers to the attached set of curves using equipment set-up as shown. Finally, check for over-all flat response. The recorder should now meet the specifications shown on the attached specification sheets.

NOTE ON STEP 14:

This change, which affects 7½ record equalization, was originally made on 300 No. 1843, which was subsequently in service for one year. Model 300 No. 2113, purchased August 1954, was in service one year with this ~~xxxxx~~ change, and the one affecting 15" record equalization ~~(xxxxx)~~ (step 15) not made...in other words, the machine was used as delivered.

No. 2113 (change not made) consistently showed better performance at 7½ ips above 8kc than No. 1843. At 15 ips, however, on nearly all types of tape there was a definite 3-5db peak above 10kc. In August, 1955, therefore, step 15 made on #2113, but not step 14. On #1843, ~~xxxxxxx~~ the .005 mfd condenser (C109) was replaced, which ~~xx~~ nullifies step 14.

This change is noted on the drawings (Fig. 6, Model 300.) The only exception to the latest drawings on file is that C109 is .005 on both 7½--15 inch machines.

8-25-55 rb

Enclosures
Fig. 6 - 9-3-52 - Record Amplifier & Power Supply
Fig. 8 - 1-2-51 - Playback Amplifier
Fig. 16- 9-5-52 - Record Amplifier Response Curves
Fig. 17- 9-5-52 - Playback Amplifier Response Curves
Service Bulletin #19 - Parts List - 9-28-52
~~Specifications Section 1 Page 1 - 2-29-52~~
~~Specifications Section 1 Page 2 - 2-29-52~~ } see manual 9-1-52

AMPEX
ELECTRIC CORPORATION
MAGNETIC RECORDERS
934 CHARTER ST. • EMERSON 8-1471
TWX REDWOOD CITY CAL 41
CABLE ADDRESS: AMPEX, REDWOOD CITY
REDWOOD CITY, CALIFORNIA

ELECTRONIC COMPONENTS NECESSARY TO MAKE EQUALIZATION CHANGES IN MODEL 300

RECORDERS SERIAL #100-175

	~~RE-44~~	~~39,000~~ 33,000 Ohm 1 Watt Composition Resistor 5%
	CO-111	.036 MFD 150 V. Tubular Condenser 5%
	RE-273	5000 Ohm Carbon Potentiometer
	CO-63	100 MFD 50 V. Electrolytic Condenser
	RL-2	3 Pole Double Throw DC Relay
	CO-10	.0035 MFD 500 V. Mica Condenser 5%
(2)	CO-21	.002 MFD 500 V. Mica Condenser 5%
(2)	CO-92	.0001 MFD Padder Condenser
	RE-32	1 Megohm 1 Watt Composition Resistor
	CO-5	.0005 MFD 500 V. Mica Condenser
	RE-255	10,000 Ohm W.W. Potentiometer
	PL-37S	Plug, Erase Output (For making Adapter for Measuring Erase Current)
	475-1AC	Head Assembly - Console
	475-2AC	Head Assembly - Rack and Portable

RECORDERS SERIAL #176-500

	CO-111	.036 MFD 150 V. Tubular Condenser 5%
	RE-273	5000 Ohm Carbon Potentiometer
	CO-63	100 MFD 50 V. Electrolytic Condenser
	RL-2	3 Pole Double Throw DC Relay
	CO-10	.0035 MFD 500 V. Mica Condenser 5%
(2)	CO-21	.002 MFD 500 V. Mica Condenser 5%
(2)	CO-92	.0001 MFD Padder Condenser
	RE-32	1 Megohm 1 Watt Composition Resistor
	CO-5	.0005 MFD 500 V. Mica Condenser
	RE-255	10,000 Ohm W.W. Potentiometer
	PL-37S	Plug, Erase Output (For Making Adapter for Measuring Erase Current)
	475-1AC	Head Assembly - Console
	475-2AC	Head Assembly - Rack and Portable

RECORDERS SERIAL #501-885

CO-111	.036 MFD 150 V. Tubular Condenser 5%
RE-273	5000 Ohm Carbon Potentiometer
CO-63	100 MFD 50 V. Electrolytic Condenser
RL-2	3 Pole Double Throw DC Relay

934 CHARTER ST. • EMERSON 8-1471
TWX REDWOOD CITY CAL 41
CABLE ADDRESS: AMPEX, REDWOOD CITY
REDWOOD CITY, CALIFORNIA

	CO-10	.0035 MFD 500 V. Mica Condenser 5%
(2)	CO-21	.002 MFD 500 V. Mica Condenser 5%
(2)	CO-92	.0001 MFD Padder Condenser
	RE-32	1 Megohm 1 Watt Composition Resistor
	CO-5	.0005 MFD 500 V. Mica Condenser
	RE-255	10,000 Ohm W.W. Potentiometer
	PL-37S	Plug, Erase Output (For Making Adapter for Measuring Erase Current)
	475-1	Head Assembly - Console
	475-2	Head Assembly - Rack and Portable

RECORDERS SERIAL #886-890

	CO-63	100 MFD 50 V. Electrolytic Condenser
	RL-2	3 Pole Double Throw DC Relay
	CO-10	.0035 MFD 500 V. Mica Condenser 5%
(2)	CO-21	.002 MFD 500 V. Mica Condenser 5%
(2)	CO-92	.0001 MFD Padder Condenser
	RE-32	1 Megohm 1 Watt Composition Resistor
	CO-5	.0005 MFD 500 V. Mica Condenser
	RE-255	10,000 Ohm W.W. Potentiometer
	PL-37S	Plug, Erase Output (For Making Adapter for Measuring Erase Current)
	475-1	Head Assembly - Console
	475-2	Head Assembly - Rack and Portable

RECORDERS SERIAL #891-1604

(2)	CO-21	.002 MFD 500 V. Mica Condenser 5%
	PL-37S	Plug, Erase Output (For Making Adapter for Measuring Erase Current)
	CO-10	.0035 MFD 500 V. Mica Condenser 5%
	475-1	Head Assembly - Console
	475-2	Head Assembly - Rack and Portable

RECORDERS SERIAL #1605-2912

	CO-10	.0035 MFD 500 V. Mica Condenser 5%
	CO-21	.002 MFD 500 V. Mica Condenser 5%

AMPEX CORPORATION
professional products division

SERVICE BULLETIN

934 CHARTER ST. · REDWOOD CITY, CALIF. · EMERSON 9-1481 · TWX REDWOOD CITY, CAL 41 · CABLE ADDRESS: AMPEX, REDWOOD CITY

INSTRUCTIONS FOR CONVERTING RACK MOUNTED SERIES 300 TOP PLATE TO CONSOLE MOUNTING

1. Remove the drive motor hinge spring "B" (Fig. 1 of instruction book) stretched between the bracket on the end bell of the drive motor and the motor locking hook extension on the drive motor mounting casting.

2. Install one end of a new #19994-01 console drive motor hinge spring in the bracket hole nearest the motor and the other end over the motor locking hook extension.

3. Remove disc "B" from the top of the takeup tension arm assembly. (Fig. 4 of instruction book). Decrease the coil spring tension by moving back the spring hook 180 degrees from the pin that the spring is hooked over to the pin on the opposite side.

4. Remove the compression type capstan idler return spring "A" (Fig. 1 of instruction book) and install a new #400-00 return spring. Re-adjustment of the capstan idler adjustment nut "F" is performed as follows:

   a. Back off the nut until the solenoid plunger can be manually bottomed and the nut clears the adjustment arm.

   b. While holding the solenoid plunger in this position, re-tighten the nut until the capstan idler just touches the capstan.

   c. From this setting the nut should be turned in an additional 2 to 2-1/2 turns so that when the recorder is running in the play position without tape, the capstan idler tire is slightly deformed at the capstan and the idler cannot be stopped with the hand. (Made to slip against the capstan).

   Springs needed for conversion:

Part No.	Description
19994-01	Drivemotor Hinge Spring (console)
400-00	Capstan Idler Return Spring (compression type)

AMPEX CORPORATION
professional products division

SERVICE BULLETIN

934 CHARTER ST. · REDWOOD CITY, CALIF. · EMERSON 9-1481 · TWX REDWOOD CITY, CAL 41 · CABLE ADDRESS: AMPEX, REDWOOD CITY

19 August 1954
300
~~23~~ 4-03
1

INSTRUCTIONS FOR CONVERTING CONSOLE MOUNTED #300 TOP PLATE TO RACK MOUNTING

1. Add: Drive motor return spring (rack mount only). Hook spring from bracket on end bell of drive motor and extend to hook on the motor locking hook extension on drive motor mounting casting.

2. Remove disc "B" (Figure 4 of instruction book) on takeup tension arm assembly and twist coil spring an additional 180°. Transfer pin to hole on opposite side and hook end of spring.

3. The compression type capstan idler return spring "A" as shown in Figure 1 of the instruction book must be stretched so that the idler will clear the tape when the drive solenoid is in the de-energized position. This spring should be stretched without removing it from the link rod so that the setting of the capstan idler adjustment nut "F" will not have to be changed. Do not over-stretch the spring, however, as too much tension against the capstan idler arm will tend to prevent the idler from providing the proper "dig" when the drive solenoid is energized. If adjustment of the capstan idler adjustment nut "F" does become necessary, the following procedure should be followed:

   Back off nut "F" until the solenoid plunger can be manually bottomed and the nut clears the adjustment arm.

   While holding the solenoid plunger in this position, re-tighten nut "F" until the capstan idler just touches the capstan. Turn nut "F" in an additional 2 to 2-1/2 turns so that when the recorder is running in the play position without tape, the capstan idler tire is slightly deformed at the capstan and the idler cannot be stopped with the hand. (Made to slip against the capstan).

4. Reel hold down knobs required: #9093

5. Head cables should be long enough if electronic chassis is mounted upside down.

AMPEX CORPORATION
MAGNETIC RECORDERS
934 CHARTER ST. • EMERSON 8-1471
TWX REDWOOD CITY CAL 41
CABLE ADDRESS: AMPEX, REDWOOD CITY
REDWOOD CITY, CALIFORNIA

PROFESSIONAL PRODUCT

SERVICE BULLETIN

DATE: April 8, 1957
MODEL: 300 Series
BULLETIN NO: 5 [redacted] 7-01
PAGE NO: 1 of 1

(Supersedes Bulletin dated 20 March 1953)

CONSOLE CABINETS

Due to design changes the information supplied in the previous bulletin is no longer valid. The four feet of the console cabinet are not adjustable.

The all-steel cabinet is painted grey hammertone. It mounts the 19" x 21-1/2" tape transport assembly horizontally 30-1/4" above floor level, with interior provisions for shockmounting the electronics. It is available in eight versions, as follows:

Catalog Number	Includes			
	Meter Panel Housing	Dummy Meter Panel	Fan and Filter Assm.	Sets, elec. sh'km'ts and base plate
521-1	Yes	No	No	0
521-2	No	No	No	0
565-0	Yes	Yes	Yes	1
565-1	Yes	Yes	Yes	2
565-2	Yes	No	Yes	1
565-3	Yes	No	Yes	2
565-4	No	No	Yes	2
565-5	No	No	No	0

In general, the #521-1 and 521-2 are cabinets which are available as replacements for damaged cabinets, when it is not necessary to replace the fan and filter assemblies or the electronics mountings. The #565 series are used in original equipment, and are available when Ampex equipment owners desire to convert from portable or rack mounting to console. #565-2 is for the standard versions of the Model 300; the others are for modifications, such as #565-4 for the S-3200 Duplicator Master and #565-5 for the Slave.

AMPEX CORPORATION
professional products division

SERVICE BULLETIN

934 CHARTER ST. · REDWOOD CITY, CALIF. · EMERSON 9-1481 · TWX REDWOOD CITY, CAL 41 · CABLE ADDRESS: AMPEX, REDWOOD CITY

(Supersedes bulletin dated 20 March 1953)

ADJUSTING LEVELS

In the event that it is desired to operate recorders at levels other than the recommended levels of + 4 VU in and out, the procedure is as follows:

I. On machines without Meter Control Panel: (assuming machine has already been adjusted in accordance with the procedure outlined in the Instruction Book)

1. Thread and play standard tape.
2. On playback of 1000 cycle tone, adjust playback gain control R213 so that output reads 10 db below new desired operating level, but not over 0 dbm.
3. Thread blank tape and start in record mode.
4. Feed recorder 1000 cps at new desired operating level.
5. Adjust record level control R101 until operating level is obtained on playback.

II. On machines with Meter Control Panel: (matching or bridging)

1. Thread and play standard tape.
2. Place playback level control at 14.
3. Adjust R213 on Meter Control Panel so that 1000 cycle tone plays back at new desired operating level (not over + 10 dbm)
4. If new level is greater than + 4 VU insert pad between playback output and meter on Meter Control Panel so that meter reads zero at new output level. If new output level is + 8 VU then use pad as shown below.

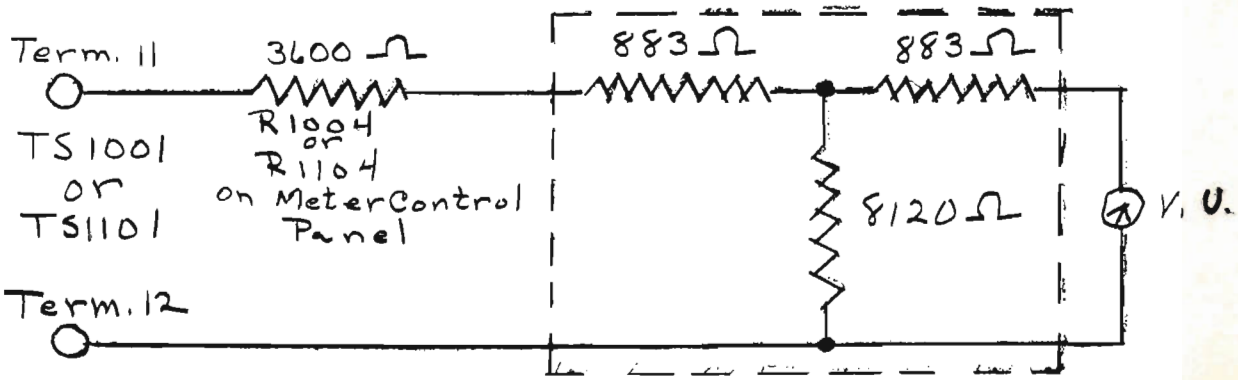

5. Thread blank tape and start in record mode, feeding 1000 cps.
6. Record Level Step control on Meter Control Panel provides accommodation for various input levels. Adjust this control until output of playback is normal operating level.

AMPEX CORPORATION
professional products division

SERVICE BULLETIN

934 CHARTER ST. · REDWOOD CITY, CALIF. · EMERSON 9-1481 · TWX REDWOOD CITY, CAL 41 · CABLE ADDRESS: AMPEX, REDWOOD CITY

1 October 1957
300
7-05
1

REPLACEMENT INSTRUCTIONS FOR REPLACING CYCLOHM DRIVE MOTOR OR ELECTRIC INDICATOR MOTOR WITH BODINE DRIVE MOTOR, SERIAL NOS. 113 TO 699

The Bodine Drive Motor which has been developed for the Model 300 runs at double the speed of the Cyclohm or Electric Indicator Drive Motor used on machines of Serial #113 to 699 and consequently uses a different size pulley. To install the Bodine Drive Motor therefore requires that a new hinge bracket be installed which will support the new motor in the proper position to engage the capstan flywheel. Also, since the windings on the Bodine Motor are different than on either the Cyclohm or Electric Indicator Motors, it must be connected in a different manner.

The procedure for making this replacement is as follows:

1. Remove retaining rings "A" on Capstan Idler link "B".

2. Remove Capstan Idler link "B".

3. Remove Capstan Idler arm from Top Plate.

4. Remove Capstan cap by loosening set screw "C".

5. Disconnect wiring harness from Drive Assembly terminal strip "D".

6. Remove Drive Assembly from machine by removing 4 elastic stop nuts "E" (only one shown).

7. Remove 4 screws "F" and drop solenoid mounting plate. Note that two screws are on the solenoid side and remainder on the opposite side of the plate.

8. Carefully remove drive lock pins "G". Be careful not to damage ears of casting.

9. Remove two bracket hinge pins "H".

10. Remove bearings from old brackets and install in new bracket.
    CAUTION: In removing bearings be careful not to injure bearing dust shield. Injury to this shield could lead to freezing of the bearing.

11. Install new bracket and motor by reversing foregoing procedure.

12. Re-assemble remainder of Drive Assembly and re-install on Top Plate.

13. Adjust solenoid adjusting nut "J" for proper speed. Since there is sometimes more than one point at which the proper speed is obtained, for stable operation, be sure nut is tightened to the point where further tightening reduces the Capstan speed.

14. The bumper should not determine the rest position of the motor. The bumper merely serves as an override bumper to damp out any motor oscillation that would cause it to bounce against tire after solenoid is de-energized. The rest position is determined by the motor spring versus the pressure of the drive solenoid spring adjustment. When properly adjusted the bumper should not quite touch motor while at rest except during shipment.

15. For modified wiring for Bodine Motor see attached wiring Diagram EA-1552.

PARTS REQUIRED FOR CONVERSION OF AMPEX RECORDERS, MODELS 300, 301 AND 302 TO BODINE DRIVE MOTOR

MODEL 300 - Serial No. 113 to 500

Quantity	Description	Part No.
1	Bodine Drive Motor Assembly	B-1030
1	Bracket, Hinge	B-1511
1	Capacitor *	CO-80
1	Shield, Bodine Drive Motor	B-1905

* Only required where original motor was manufactured by Electric Indicator. Cyclohm and Bodine Drive Motors use same capacitor.

1 October 1957
300
7-05
3

Quantity	Description	Part No.
	Serial No. 501 to 600	
1	Bodine Drive Motor Assembly	B-1030
1	Bracket, Hinge	B-1072
1	Shield, Bodine Drive Motor	B-1905
	MODEL 301 AND 302 - Serial No. 113 to 500	
1	Bodine Drive Motor Assembly	B-1075
1	Bracket, Hinge	B-1981
1	Capacitor	CO-80
1	Capstan Assembly	C-366
1	Shield, Bodine Drive Motor	B-1905
	Serial No. 501 to 699	
1	Bodine Drive Motor Assembly	B-1075
1	Bracket, Hinge	B-518-3
1	Capacitor	CO-80
1	Capstan Assembly	C-366
1	Shield, Bodine Drive Motor	B-1905

Prices on Request

1 October 1957
300
7-05
4

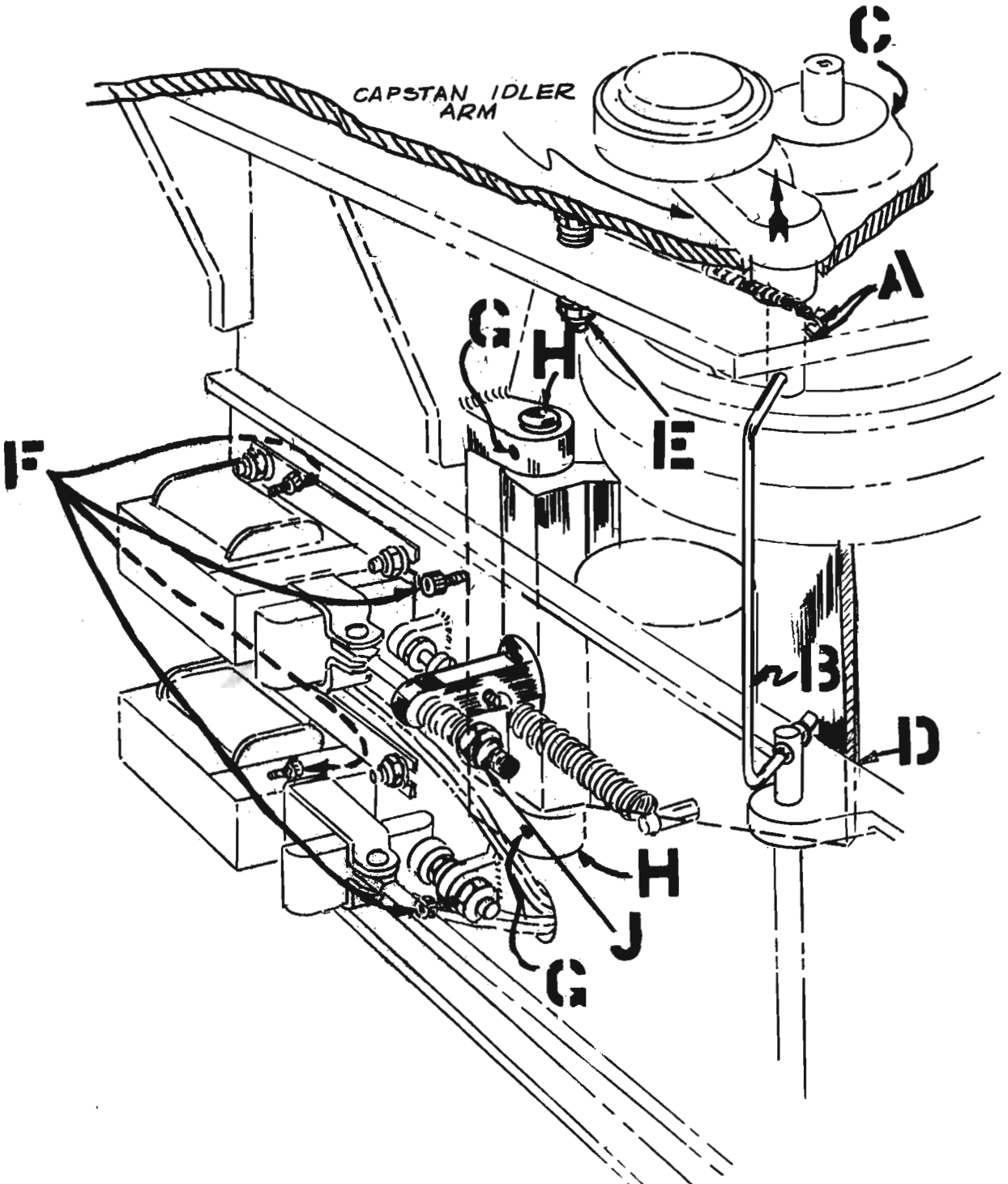

PROFESSIONAL PRODUCTS DIVISION

1 October 1957
300
7-05
5

Sw 1
Sw 2
Sw 3
Sw 4

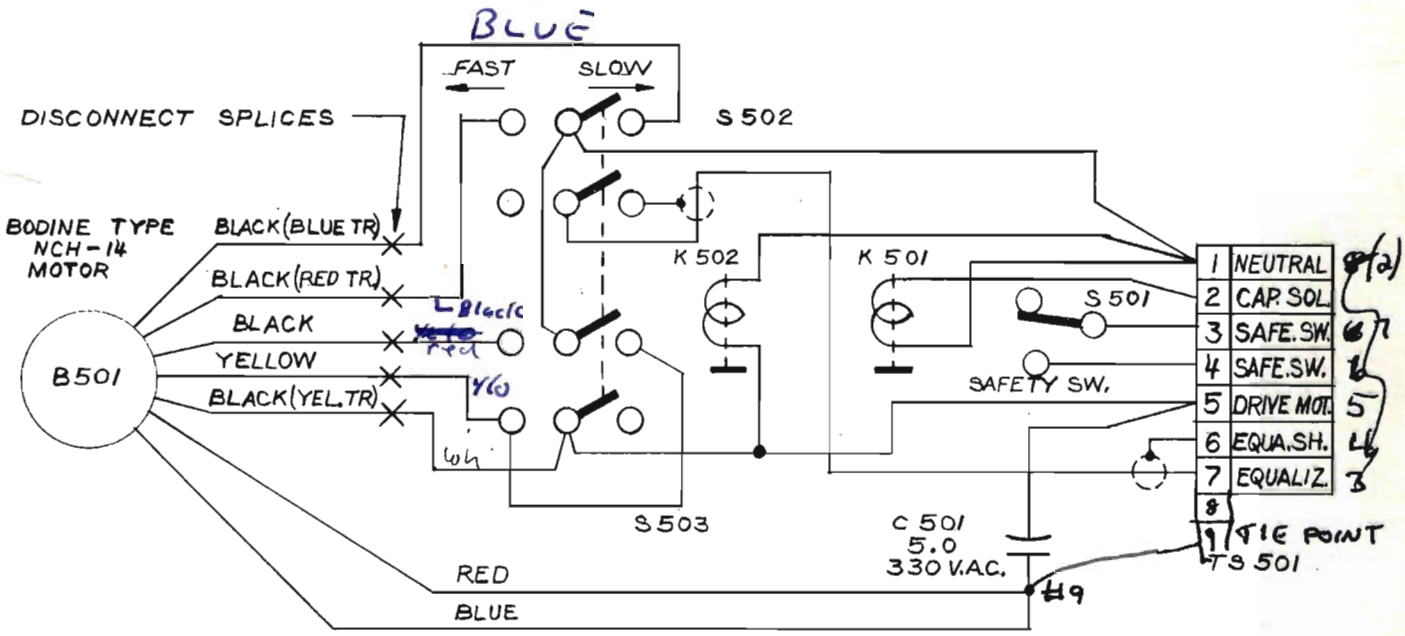

ALLOW 8" LEAD LENGTH
FROM MOTOR TO DIS-
CONNECT SPLICES

120 cap sol
neutral 9
AC 5

1 October 1957
300
7-05
6

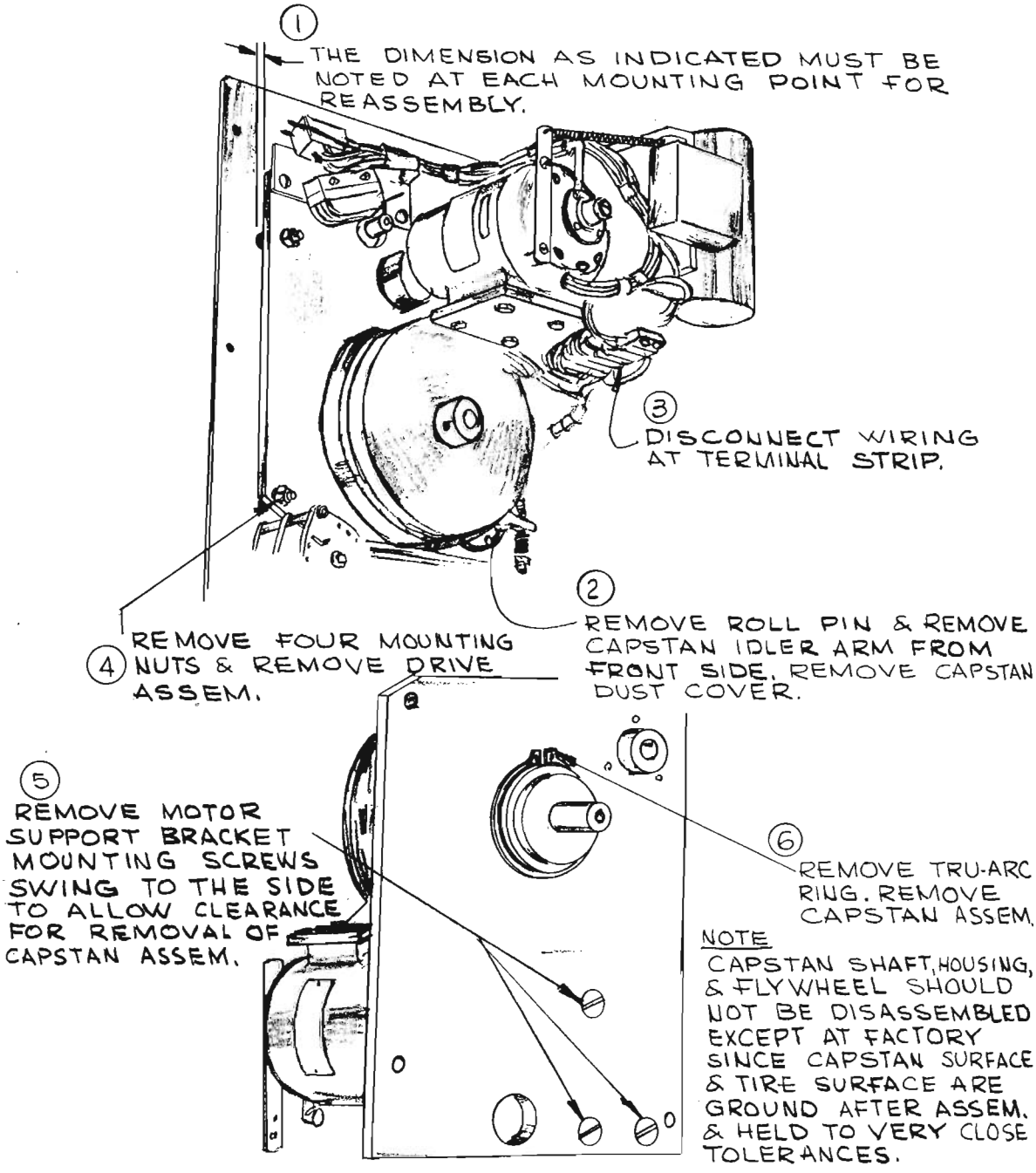

NOTE. NUMBERED BALOONS INDICATE SEQUENCE OF DISASSEMBLY. REVERSE SEQUENCE FOR REASSEMBLY.

REMOVAL OF CAPSTAN ASSEM.

AMPEX CORPORATION
MAGNETIC RECORDERS
934 CHARTER ST. • EMERSON 8-1471
TWX REDWOOD CITY CAL 41
CABLE ADDRESS: AMPEX, REDWOOD CITY
REDWOOD CITY, CALIFORNIA

PROFESSIONAL PRODUCT

SERVICE BULLETIN

DATE: 15 March 1957
MODEL: 300 Series
BULLETIN NO: ~~17~~ 7-06
PAGE NO: 1 of 2
(Supersedes bulletin dated 20 March 1953)

MOTOR LUBRICATION

The first Model 300 machines were equipped with ball bearing drive motors, which require no attention. Since that time sleeve bearing drive motors have been available, and have been used on all subsequent production. If your machine has a sleeve bearing drive motor, be sure to add the lubrication of this motor to the maintenance schedule.

It has been found that among the lubricants previously recommended are some that may be incompatible with the lubricant furnished in the motors.

To correct this situation, we must recommend that only the following lubricants be used in the sleeve bearing type motors:

Gulfcrest "A" - Product of Gulf Oil and Refining Company
Stanoil #18 or #25 - Product of Standard Oil Co. of Indiana
Gergoyle D.T.E. Light - Product of Socony Vacuum Oil Co.
Caloil OC-11 - Product of California Oil Corp.
This oil is available from Ampex in four ounce cans as Catalog #087-005.

CAUTION: If any other lubricants have been used, the motor should be disassembled enough to wipe the motor shaft and the bearings clean before re-oiling.

The motor manufacturers further recommend that motors of this type in continuous use should be lubricated every 3 months or 300 to 500 hours.

The motor should be lubricated with a pump-type oil can. To reach the upper bearing in the console model, the spout should have a bend in it less than three inches from the end. In the portable model, the upper bearing is most conveniently reached by unbolting and lifting the top-plate. The top-plate should be tipped up by raising the right-hand end, as viewed when facing the front of the machine. Use the hold-down knob on the takeup motor as a handle for lifting. The plate need only be lifted a few inches to expose the bearing to be lubricated.

Ampex Motor Evaluation Group recommends that sleeve bearing motors should be run for one hour when installed and before applying their normal load. This is especially important on sleeve bearing motors that have been stored

for any length of time.

Run-in is necessary since there is a tendency for some oxidation (not necessarily visible) in the lubricant causing an apparent low torque condition.

One hour run-in generally is all that is necessary to clear up this condition and once the motor is installed, this problem is not as critical and less likely to happen.

AMPEX CORPORATION
professional products division

SERVICE BULLETIN

934 CHARTER ST. · REDWOOD CITY, CALIF. · EMERSON 9-1481 · TWX REDWOOD CITY, CAL 41 · CABLE ADDRESS: AMPEX, REDWOOD CITY

DATE: 15 March 1957
MODEL: 300 Series
BULLETIN NO: 7-07
PAGE NO: 1 of 1
(Supersedes General Bulletin #9 dated September 12, 1956)

REPLACEMENT OF CAPSTAN ASSEMBLIES

300 Series Tape Transport Mechanisms manufactured before November 1955 used the Ampex part number 366 and 1512 Series Capstan Assemblies. These assemblies were mounted on the frame plate with a Tru-Arc retaining ring #430-050.

On Tape Transports manufactured after November 1955 the Capstan Assembly is mounted with a retaining collar on the frame plate by three 10-24 x 3/4" socket head cap screws #470-108 and three lockwashers #502-011.

When ordering replacement Capstan Assemblies, order 366 and 1512 Series for machines with Serial numbers 55K____ or earlier, eg. 55J____. For machines with Serial numbers higher than 55K, eg. 55L, order 7518 Series Capstan Assemblies.

If the later model Capstan Assembly is to be mounted on the older Tape Transport Mechanism, it will be necessary to drill and tap the frame plate for 10-24 screws. Three (3) holes on a 2.688 diameter.

The drawing shown below can be used as a template.

#10 Drill - 3 Holes on 2.688 Diameter

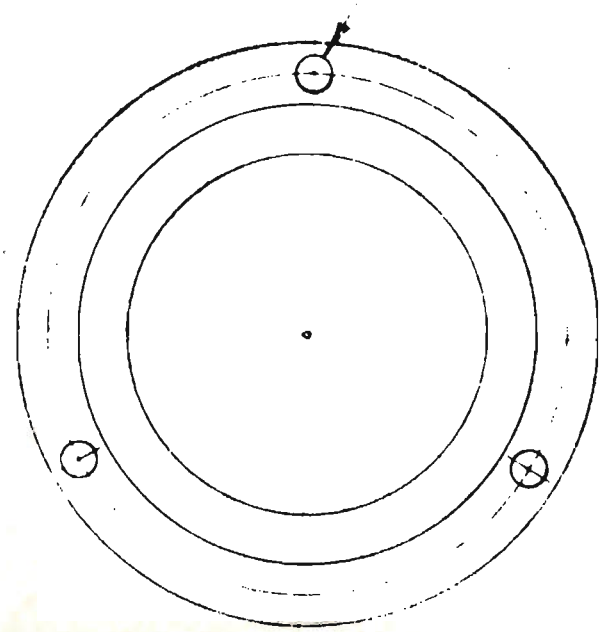

Tape Speed (ips)	Catalog Number of Capstan Assembly		Shaft Diameter, inches	Bushing Diameter, inches
	Retaining Ring Mount	Collar Mount		
3-3/4 - 7-1/2	366-4	7518-4	.237	---
7-1/2 - 15	366-1	7518-3	.475	---
15 - 30	366-1	7518-3	.475	---
3-3/4 - 7-1/2 -15	2540-1	7518-6	.237	.481
7-1/2 - 15 - 30	1512-1	7518-1	.475	.959
15-30-60	1512-1	7518-1	.475	.959

AMPEX
CORPORATION
MAGNETIC RECORDERS
934 CHARTER ST. • EMERSON 8-1471
TWX REDWOOD CITY CAL 41
CABLE ADDRESS: AMPEX, REDWOOD CITY
REDWOOD CITY, CALIFORNIA

PROFESSIONAL PRODUCT

SERVICE BULLETIN

DATE: April 24, 1957
MODEL: 300 Series
BULLETIN NO: ~~25~~ 7-08

CONVERSION OF MODEL 300 TO 15-30 IPS

One of the standard modifications of the Model 300 is a conversion to run at 15 and 30 inches per second. The difference in speed is accomplished by changing the diameter of the motor pulley. A lower mass flywheel is required on the reel idler.

The electronic alterations consists of incorporating relays which operate from the Speed Change Switch. At the 30 ips speed, the relays operate to alter the equalization characteristics in accordance with the requirements of the higher speed.

The specifications are identical to those of the 7-1/2 - 15 ips machine except for speed and frequency response. The frequency response at the 30 inch speed is plus or minus 2 db, 50 to 15000 cycles.

PARTS REQUIRED

251	Flywheel, Reel Idler
352	Spacer, Reel Idler
817	Bracket, Relay Mounting
1030-2	Motor Assembly, 15-30 ips, 60 cps
or 1030-4	Motor Assembly, 15-30 ips, 50 cps
3958-3	Bracket, Motor Mounting
020-001	Relay

RECORD ELECTRONICS

Disconnect swinger of K102 and L101 and connect to ground.
Remove C109.
Remove C110.
Place C110 between open end of L101 and ground.
Connect high speed contact of K102 to C105 and R106.

AMPEX
CORPORATION
934 CHARTER ST. • EMERSON 8-1471
TWX REDWOOD CITY CAL 41
CABLE ADDRESS: AMPEX, REDWOOD CITY
REDWOOD CITY, CALIFORNIA

MAGNETIC RECORDERS

PROFESSIONAL PRODUCT

SERVICE BULLETIN

DATE: April 24, 1957
MODEL: 300 Series
BULLETIN NO: 25

PLAYBACK ELECTRONICS

Add Ampex #020-011 Relay, connecting coil to pins 7 and 8 of power supply terminal switch.
Connect normally open contact of relay to hot side of R205.
Connect swinger contact to ground.
Realign both electronics.

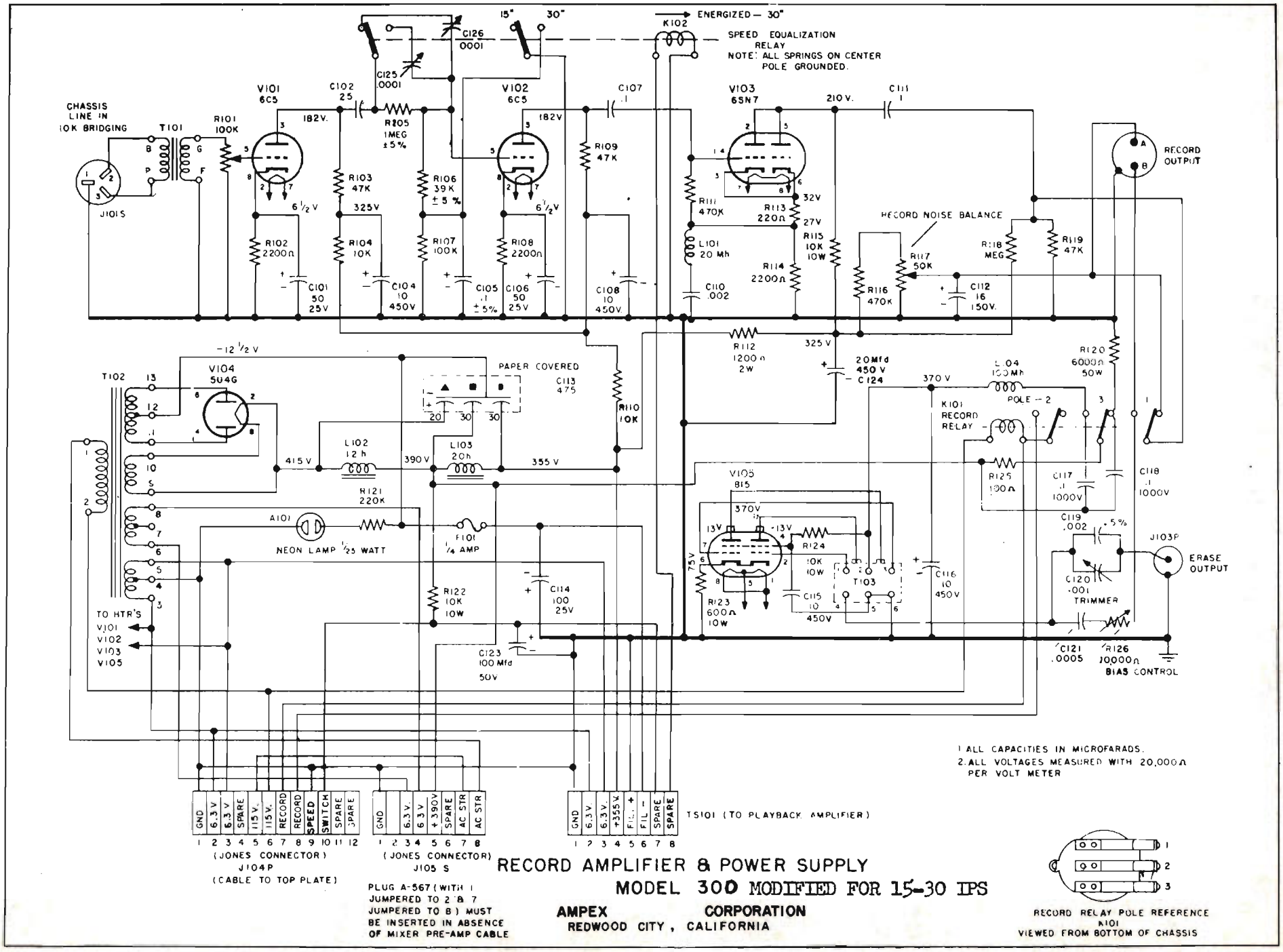
CHASSIS LINE IN 10K BRIDGING
J101S
T101
R101 100K
V101 6C5
C102 25
182V.
R103 47K
R102 2200Ω
C101 50 25V
6 1/2 V
325V
R104 10K
C104 10 450V
R105 1MEG ±5%
R106 39K ±5%
R107 100K
C105 .1 ±5%
C106 50 25V
C125 .0001
C126 0001
15"
30"
V102 6C5
182V
R108 2200Ω
C107 .1
R109 47K
C108 10 450V
K102
ENERGIZED — 30"
SPEED EQUALIZATION RELAY
NOTE: ALL SPRINGS ON CENTER POLE GROUNDED.
V103 6SN7
210 V.
C111 1
R111 470K
L101 20 Mh
C110 .002
R113 220Ω
32V
27V
R115 10K 10W
R114 2200Ω
RECORD NOISE BALANCE
R117 50K
R116 470K
C112 16 150V.
R118 MEG
R119 47K
RECORD OUTPUT
A
B
R112 1200Ω 2W
325 V
20Mfd 450 V C124
370 V
L 04 100 Mh
POLE — 2
K101 RECORD RELAY
R120 6000Ω 50W
C118 .1 1000V
C117 .1 1000V
R125 190Ω
C119 .002 ±5%
J103P
ERASE OUTPUT
C120 .001 TRIMMER
C121 .0005
R126 10,000Ω BIAS CONTROL
-12 1/2 V
V104 5U4G
T102
PAPER COVERED
C113 475
20 30 30
R110 10K
415 V
L102 12 h
390 V
L103 20h
355 V
R121 220K
A101
NEON LAMP 1/25 WATT
F101 1/4 AMP
R122 10K 10W
C114 100 25V
C123 100 Mfd 50V
TO HTR'S
V101
V102
V103
V105
V105 815
370V
13V
R124 10K 10W
T103
C115 10 450V
C116 10 450V
R123 600Ω 10W
75V
1 ALL CAPACITIES IN MICROFARADS.
2. ALL VOLTAGES MEASURED WITH 20,000Ω PER VOLT METER
GND
6.3 V
SPARE
115 V.
RECORD
SPEED SWITCH
AC STR
+390V
+355V.
FIL. +
FIL. −
TS101 (TO PLAYBACK AMPLIFIER)
(JONES CONNECTOR) J104P (CABLE TO TOP PLATE)
(JONES CONNECTOR) J105 S
PLUG A-567 (WITH 1 JUMPERED TO 2 & 7 JUMPERED TO 8) MUST BE INSERTED IN ABSENCE OF MIXER PRE-AMP CABLE
RECORD AMPLIFIER & POWER SUPPLY
MODEL 300 MODIFIED FOR 15-30 IPS
AMPEX CORPORATION
REDWOOD CITY, CALIFORNIA
RECORD RELAY POLE REFERENCE K101 VIEWED FROM BOTTOM OF CHASSIS

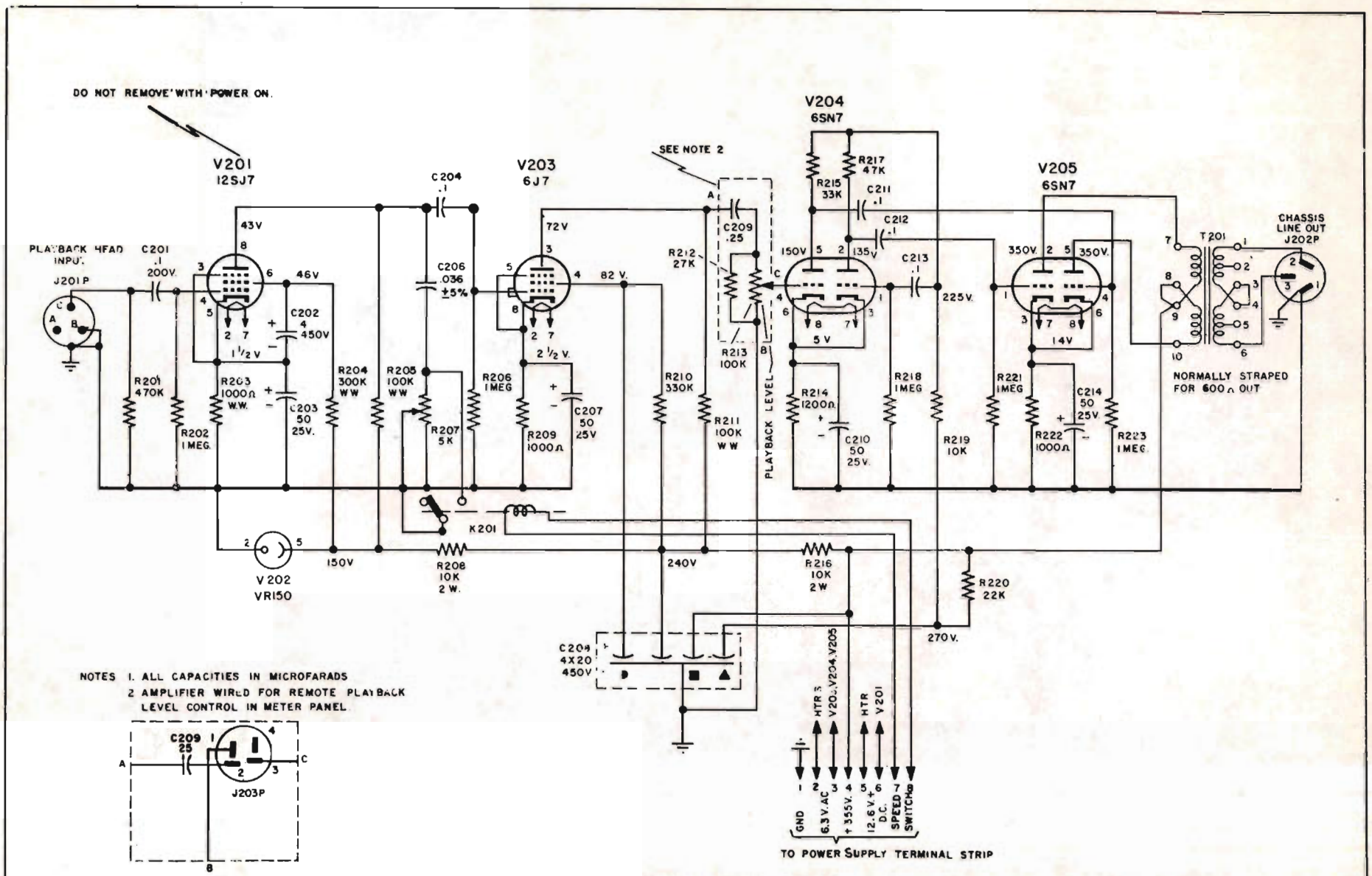

PLAYBACK AMPLIFIER
MODEL 30D MODIFIED FOR 15-30 IPS

AMPEX CORPORATION
REDWOOD CITY, CALIFORNIA

AMPEX CORPORATION
MAGNETIC RECORDERS
934 CHARTER ST. • EMERSON 8-1471
TWX REDWOOD CITY CAL 41
CABLE ADDRESS: AMPEX, REDWOOD CITY
REDWOOD CITY, CALIFORNIA

PROFESSIONAL PRODUCTS

SERVICE BULLETIN

DATE: 9-17-57
MODEL: 300
BULLETIN NO: ~~26~~ 7-09
PAGE NO: 1 of 1

6768 TURNTABLE MOTOR ASSEMBLY

Due to increase in number of vendors supplying motors to Ampex, a problem has arisen on the above listed assembly.

The 6768 Turntable Motor Assembly is now distinctly segregated into three (3) separate dash (-) numbers.

6768-1 uses a long frame Bodine motor
6768-2 uses a long frame induction motor
6768-3 uses a short frame Ashland motor

The 6768-1 and -2 will operate well in either the Model 300 or 350. However, the 6768-3 should only be used with the Model 350. Model 300's manufactured prior to 1954 cannot use the 6768-3 motor due to turntable height differences. Therefore, this motor should not be used on any model 300 produced prior to 1954.

GEP:kjd

AMPEX CORPORATION
professional products division

SERVICE BULLETIN

934 CHARTER ST. · REDWOOD CITY, CALIF. · EMERSON 9-1481 · TWX REDWOOD CITY, CAL 41 · CABLE ADDRESS: AMPEX, REDWOOD CITY

June 11, 1958
300
~~28~~ 8-01

CONVERSION OF METER CONTROL PANELS

In order to switch the VU meter of the 515 meter control panel to read either input or output of the Model 300 recorder, it is necessary to use a matching meter control panel with the circuitry shown in the attached figure. The parts required are as follows:

Reference	Description	Ampex Part No.
R1001	600 ohm "T" Pad 20 Step (Daven T-321-G)	045-009
R1006	560 ohm 1 Watt Resistor	041-142

In addition to installation of the above parts in the input circuitry, note that the meter and its associated resistor R1004 are now connected across monitor line.

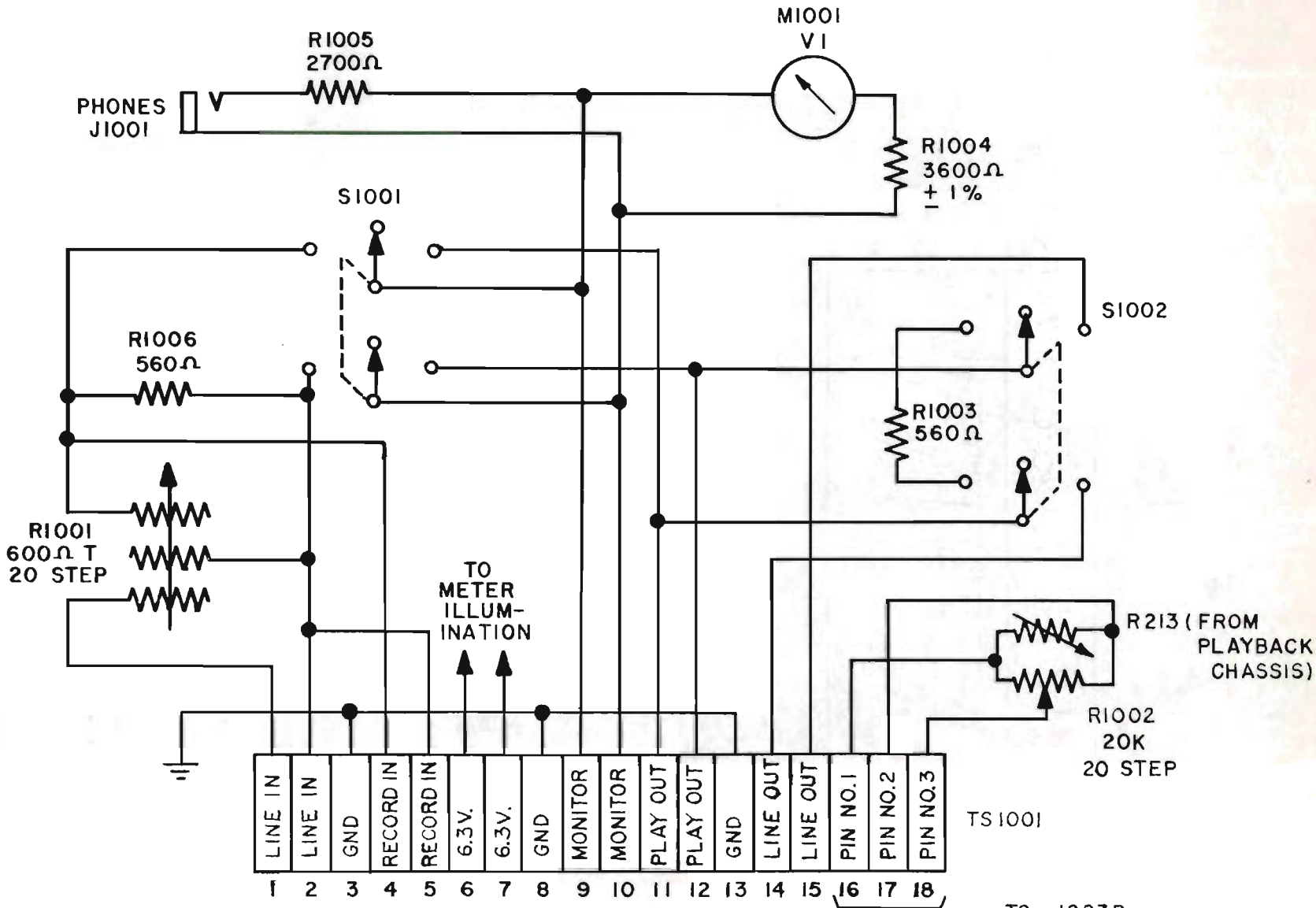

METER CONTROL PANEL (MATCHING)
MODEL 300

AMPEX CORPORATION
professional products division

SERVICE BULLETIN

934 CHARTER ST. · REDWOOD CITY, CALIF. · EMERSON 9-1481 · TWX REDWOOD CITY, CAL 41 · CABLE ADDRESS: AMPEX, REDWOOD CITY

September 15, 1958
300
~~25~~ 8-02
1

CHANGES IN DRIVE MOTOR WIRING

Bodine drive motors are wired in a different manner than other drive motors now alternately used in the 300 series transports. The color code conversion and termination points are as follows:

Bodine	Other Motors	Harness Color
Blue Trace	Blue	Blue
Black	Blue Trace	Black
Yellow	Red Trace	Yellow
Red Trace	Red	Red
Yellow Trace	Yellow Trace	White
Red) Tied	(Yellow)	(To #9 on
Blue) Together	(Black)	(Terminal Strip

When a Bodine motor is replaced with the new wiring standard motor, the two yellow wires going to the speed change switch nearest the top plate must be removed from the switch, soldered together, and taped over. In the case of replacing a new wiring standard motor with a Bodine motor, the two yellow wires will be found taped together in the harness. These must be soldered to the speed change switch as shown in Figure 1.

Model 300 transports with serial numbers below 700 used Cyclohm or EAD motors. In order to replace these motors, the instructions given in service bulletin #14 should be followed prior to any changes noted in this bulletin.

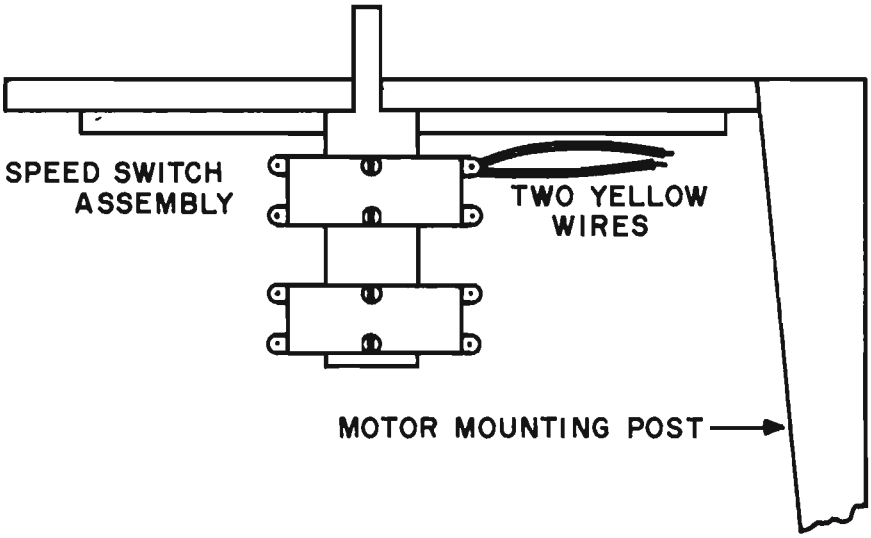
SPEED SWITCH
ASSEMBLY
TWO YELLOW
WIRES
MOTOR MOUNTING POST

FIGURE I

AMPEX CORPORATION
professional products division

SERVICE BULLETIN

934 CHARTER ST. · REDWOOD CITY, CALIF. · EMERSON 9-1481 · TWX REDWOOD CITY, CAL 41 · CABLE ADDRESS: AMPEX, REDWOOD CITY

CONVERSION OF 1/4" TRANSPORTS TO 1/2" TRANSPORTS

A kit containing the necessary parts for this conversion is available as Ampex catalog #30906.

In reference to transport assembly, the procedure for making this change is as follows:

1. Remove capstan idler assembly by loosening Allen set screw in end of idler arm. (See Figure I)

2. Turn tape transport upside down, if console type, and block so that weight is not resting on turntable shafts. If rack mounted, leave in rack.

3. Note two (2) holes, one (1) inch apart in top plate subassembly and in top plate backing panels near opening for reel idler. (See Figure II)

4. Drill two (2) holes through top plate facing panel with a #28 drill, using the two (2) holes noted in #3 above as guides.

5. Install #6050 rotary tape guide using #6-32 machine screws supplied.

6. Slip back the insulating sleeves on the solenoid and capacitor wires. Disconnect the QUIK-CLIP connectors.

7. Remove the three brake assembly mounting screws.

8. Remove the supply turntable brake assembly and replace with the new 17327-04 brake assembly.

9. Remove the take-up turntable brake assembly and replace with the new 17327-03 brake assembly. These brake assemblies are factory adjusted and further adjustments should not be necessary. However, if they are, see service bulletin #6. (Enclosed with kit.)

10. Replace 1/4" tape guide on take-up tension arm with 1/2" tape guide supplied.

11. Install the new capstan idler assembly.

NOTE: Reel idler tension arm and associated 1/4" tape guide may be removed; however, they do not interfere with 1/2" operation.

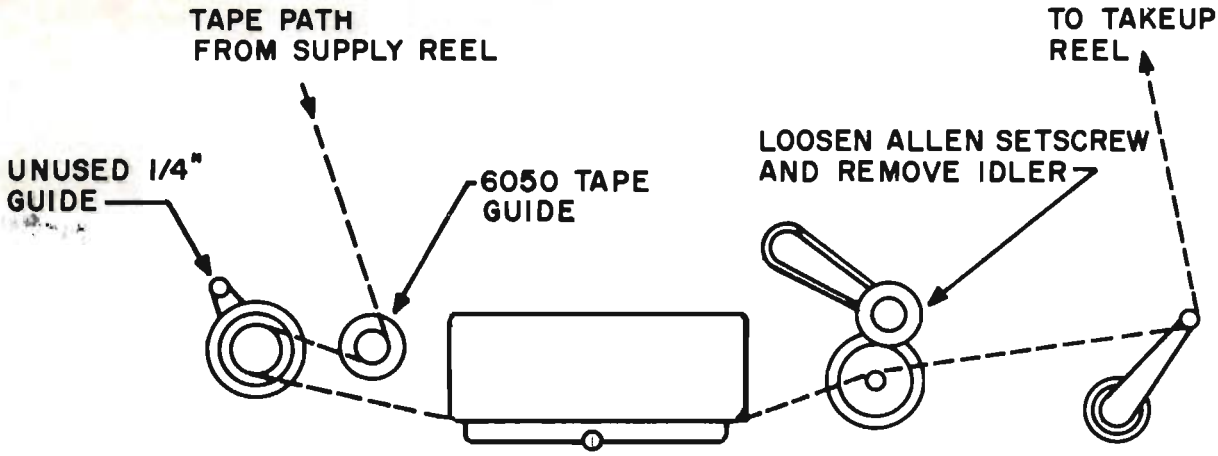

TOP VIEW OF TRANSPORT

FIGURE I

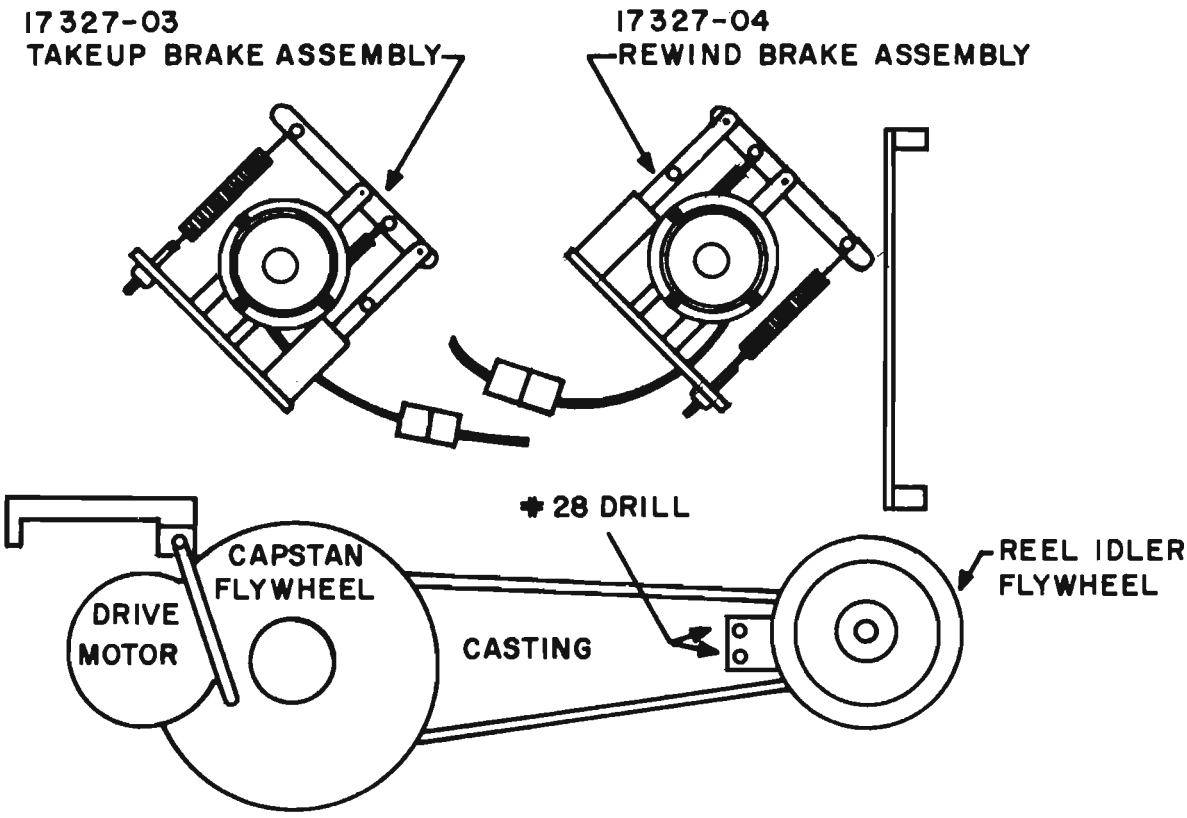

UNDERSIDE OF TRANSPORT

FIGURE II

AMPEX CORPORATION
professional products division

SERVICE BULLETIN

934 CHARTER ST. · REDWOOD CITY, CALIF. · EMERSON 9-1481 · TWX REDWOOD CITY, CAL 41 · CABLE ADDRESS: AMPEX, REDWOOD CITY

CONVERTING SINGLE CHANNEL 7-1/2-15 IPS MODEL 300 RECORDERS TO MULTICHANNEL RECORDERS

Kits for converting single channel AMPEX 7-1/2-15 IPS Model 300 recorders to two channel, three channel or two channel mastering recorders are available, as follows:

DESCRIPTION		KIT NUMBER
300-2 Console	(1/4" tape)	30844-01
300-2M Console	(1/2" tape)	30844-02
300-3 Console	(1/2" tape)	30844-03
300-2 Rackmount	(1/4" tape)	30844-04
300-2M Rackmount	(1/2" tape)	30844-05
300-3 Rackmount	(1/2" tape)	30844-06

The kits include the required electronics, necessary interconnecting cables, proper head assembly, electronics housing in the case of console mount, 1/2" transport conversion kit for 300-2M or 300-3 kits, all hardware required, conversion instructions, and maintenance manual.

All electronics supplied will be of current 300 multichannel type including equalization for 7-1/2-15 IPS NAB curves plus 15 IPS AME curve.

Due to the large number of major components in these kits, delivery time will normally be 30 to 60 days from date of order.

AMPEX CORPORATION
professional products division

SERVICE BULLETIN

934 CHARTER ST. · REDWOOD CITY, CALIF. · EMERSON 9-7111 · TWX REDWOOD CITY, CAL 41 · CABLE ADDRESS: AMPEX, REDWOOD CITY

IMPROVING LOW FREQUENCY RECORD RESPONSE IN 559 ELECTRONICS

The low frequency response of catalog number 559 electronics used with single channel Model 300 recorders may be somewhat improved by replacing the 39K resistor R106 with a 33K, 5% 1W resistor, Ampex catalog number 041-113. The improvement in record response will amount to about 1 db at 50 cps.

AMPEX CORPORATION
professional products division

SERVICE BULLETIN

934 CHARTER ST. · REDWOOD CITY, CALIF. · EMERSON 9-1481 · TWX REDWOOD CITY, CAL 41 · CABLE ADDRESS: AMPEX, REDWOOD CITY

Date: June 25, 1959
Model: 300
Buletin No: 9-04

CHANGE IN RECORD CURVES - MODIFICATION OF CATALOG NUMBER 559 ELECTRONICS (MONAURAL TYPE)

During the past few years, the major producers of magnetic tape have improved the short wavelength (high frequency) characteristics of their product. With decreased tape losses in the recording process it is no longer necessary to use as much high frequency record pre-emphasis as was required some years ago. Ampex has therefore established new record curves based on the average characteristic of present tapes. It should be noted that the signal placed on the tape has not changed; therefore, interchangeability of tapes on machines properly adjusted to the NAB standard is not affected. To obtain the new curves with the catalog number 559 electronics, the record amplifier may be modified as follows:

Clip out C110 (.002) and C109 (.0035). These are the two capacitors leading from the long terminal board to the equalization relay. This effectively removes L101 from the circuit as well and, if desired, its leads may be clipped and the coil removed from the board.

Loosen the two screws holding the long terminal board to the chassis. Remove R105 (1 meg) resistor located on the relay side of the terminal board and replace it with a 470K, 1 watt, 5% resistor (Ampex number 041-124). Replace the terminal board on the amplifier chassis. Set the amplifier to the new record curves attached using the test procedure given in the maintenance manual. After installing the amplifier in the recorder, a complete response check of the machine should be made with the same kind of tape which will be used during recording. Some trimming of the record equalization may be required depending upon the tape used.

AMPEX CORPORATION
professional products division

SERVICE BULLETIN

934 CHARTER ST. · REDWOOD CITY, CALIF. · EMERSON 9-7111 · TWX REDWOOD CITY, CAL 41 · CABLE ADDRESS: AMPEX, REDWOOD CITY

Date:
Model: 300
Bulletin No: 9-05
Page 1

EARLY AMPEX 351 electronics used for 300 multi-track recorders

MODIFICATION OF 30750-09 AND -10 ELECTRONICS TO NEW RECORD CURVES

During the past few years, the major producers of magnetic tape have improved the short wavelength (high frequency) characteristics of their product. With decreased tape losses in the recording process it is no longer necessary to use as much high frequency record preemphasis as was required some years ago. Ampex has therefore established new record curves based on the average characteristics of present tapes. It should be noted that the signal placed on the tape has not changed; therefore, interchangeability of tapes on machines properly adjusted to the NAB standard or the AME standard is not affected. To obtain the new curves with the catalog number 30750-09 or -10 electronics, the record amplifier may be modified as follows:

1. Remove 1C12.

2. Remove 1C6 and install a jumper wire in its place.

3. Change 1C11 to a .0027 mfd (Ampex number 035-238).

4. Remove 4R66 and install a 1400-3055 mmf trimmer (Ampex number 038-011), in its place.

5. Set the amplifier to the new record curves attached using the test procedure given in the maintenance manual.

6. Install the amplifier in the recorder and make a complete response check of the machine using the same kind of tape which will be used during recording. Some trimming of the record equalization and/or bias may be required depending upon the tape used.

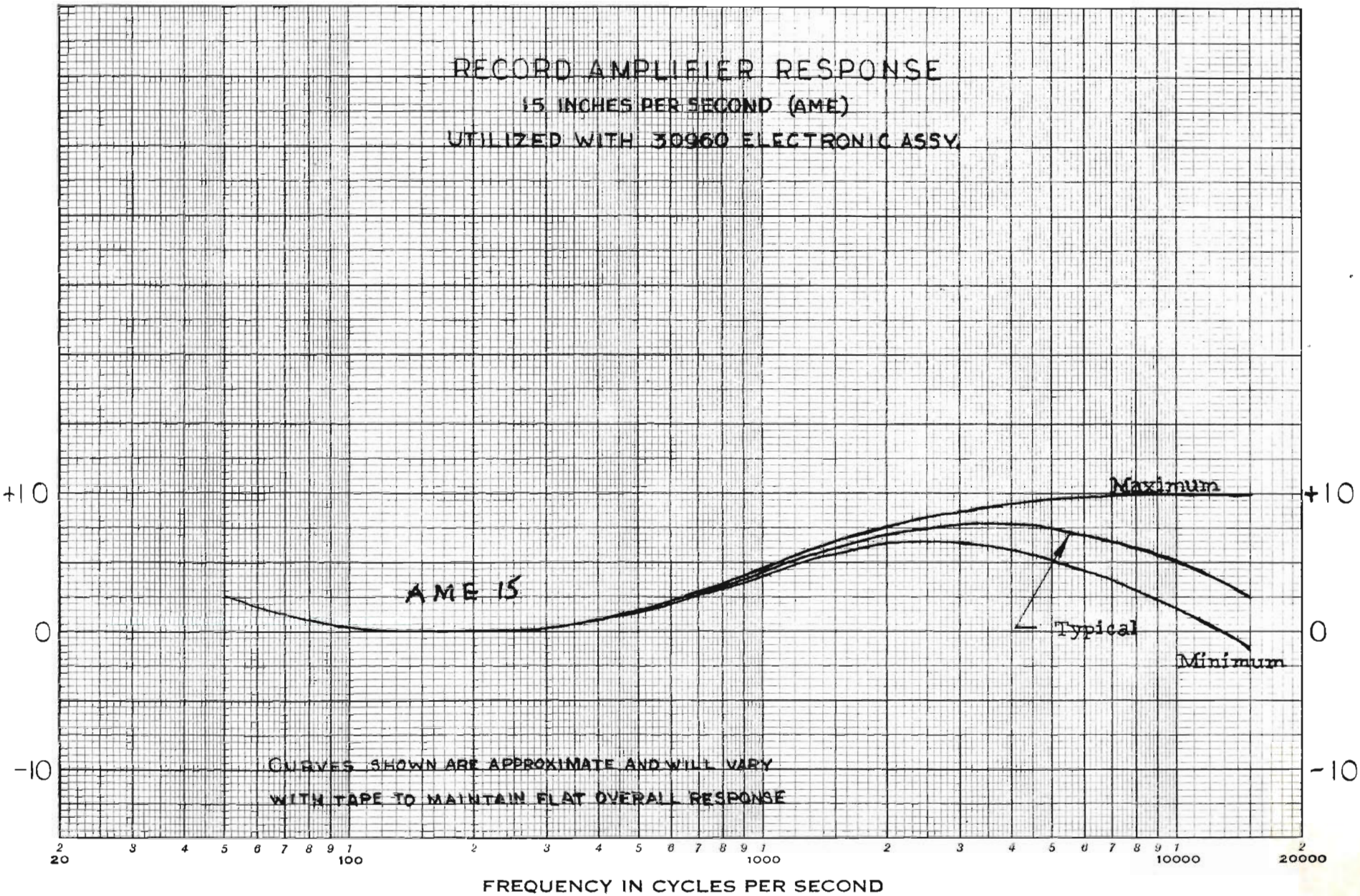
RECORD AMPLIFIER RESPONSE
15 INCHES PER SECOND (AME)
UTILIZED WITH 30960 ELECTRONIC ASSY.
+10
0
-10
AME 15
Maximum
Typical
Minimum
CURVES SHOWN ARE APPROXIMATE AND WILL VARY
WITH TAPE TO MAINTAIN FLAT OVERALL RESPONSE
20
100
1000
10000
20000
FREQUENCY IN CYCLES PER SECOND

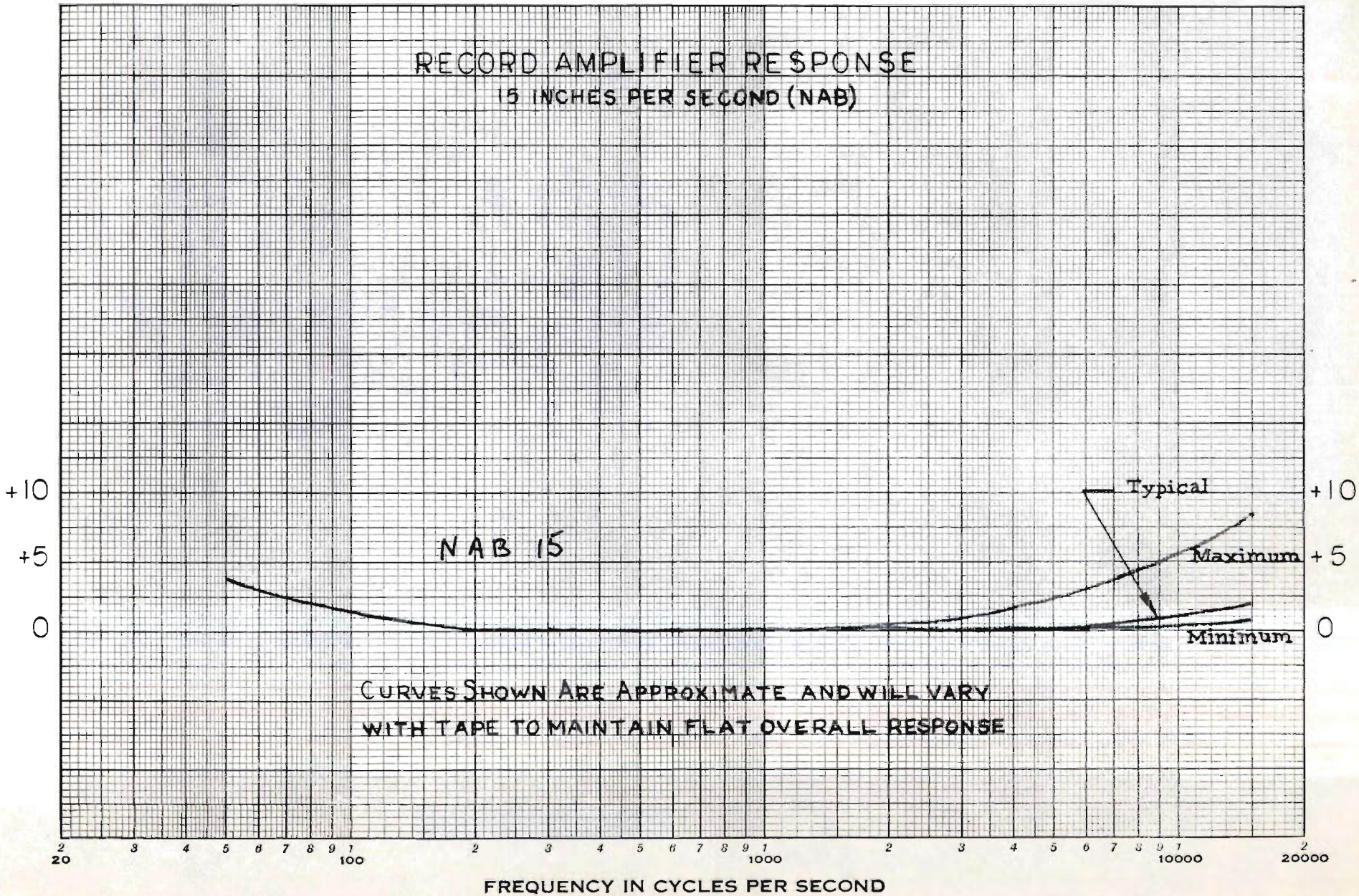
RECORD AMPLIFIER RESPONSE
15 INCHES PER SECOND (NAB)
NAB 15
Typical
Maximum
Minimum
+10
+5
0
CURVES SHOWN ARE APPROXIMATE AND WILL VARY
WITH TAPE TO MAINTAIN FLAT OVERALL RESPONSE
20
100
1000
10000
20000
FREQUENCY IN CYCLES PER SECOND

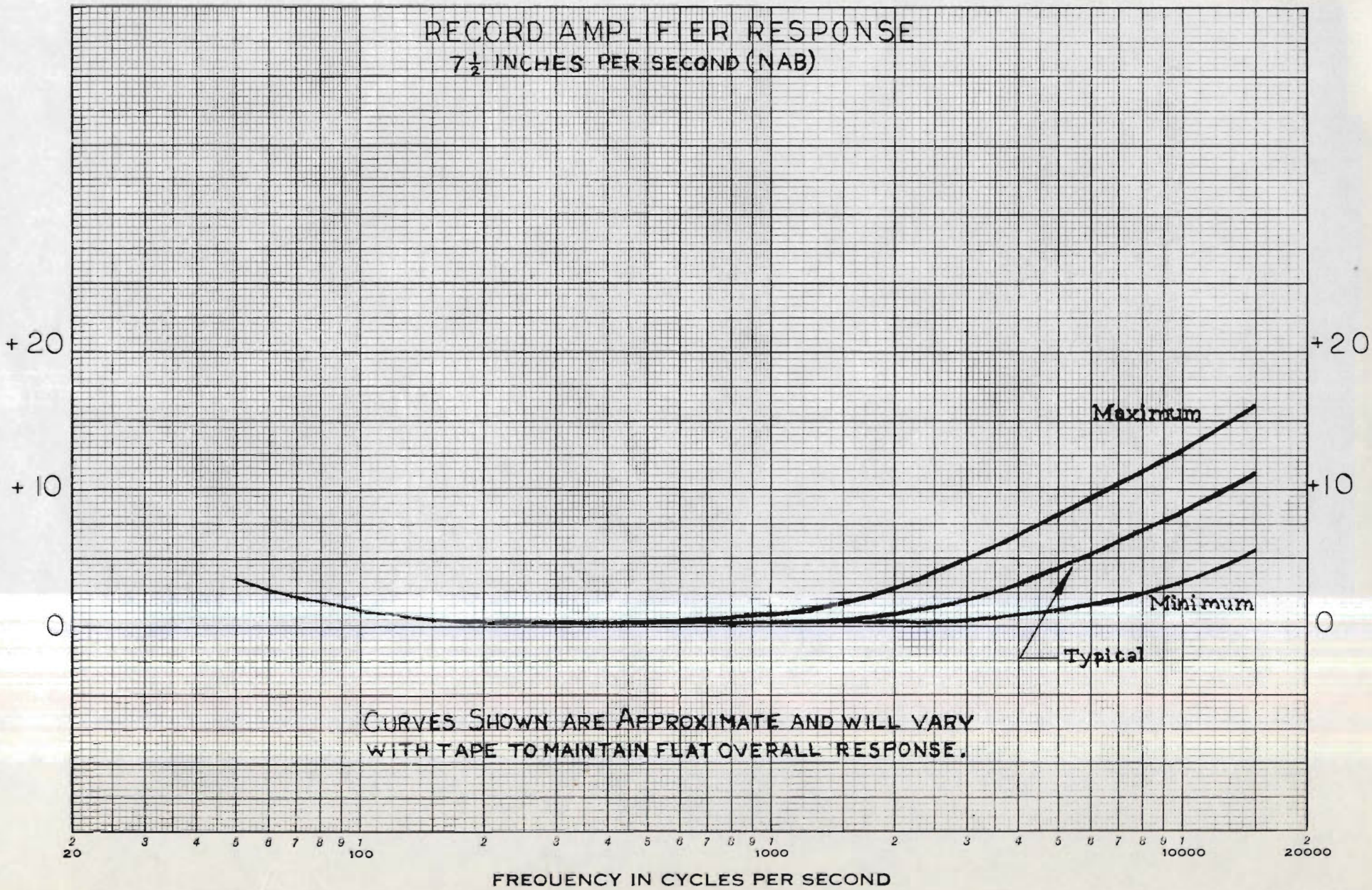
RECORD AMPLIFIER RESPONSE
7½ INCHES PER SECOND (NAB)
+20
+10
0
Maximum
Minimum
Typical
CURVES SHOWN ARE APPROXIMATE AND WILL VARY
WITH TAPE TO MAINTAIN FLAT OVERALL RESPONSE.
20
100
1000
10000
20000
FREQUENCY IN CYCLES PER SECOND

AMPEX
CORPORATION
MAGNETIC RECORDERS
934 CHARTER ST. • EMERSON 8-1471
TWX REDWOOD CITY CAL 41
CABLE ADDRESS: AMPEX, REDWOOD CITY
REDWOOD CITY, CALIFORNIA

PROFESSIONAL PRODUCT
SERVICE BULLETIN

DATE: May 3, 1957
MODEL: 300 Series
BULLETIN NO: 11
PAGE NO: 1 of 1
(Supersedes bulletin dated 20 March 1953)

The information contained in the previous issue of this bulletin is no longer applicable, so the bulletin is discontinued herewith.

For the bias adjustment procedure on all versions of the Model 300 series recorders, see the current Model 300 Maintenance Manual and Service Bulletin # 19.

AMPEX CORPORATION
professional products division

SERVICE BULLETIN

934 CHARTER ST. · REDWOOD CITY, CALIF. · EMERSON 9-1481 · TWX REDWOOD CITY, CAL 41 · CABLE ADDRESS: AMPEX, REDWOOD CITY

September 3, 1958
300
12

The information formerly contained in this bulletin is now obsolete.

AMPEX CORPORATION
professional products division

SERVICE BULLETIN

934 CHARTER ST. · REDWOOD CITY, CALIF. · EMERSON 9-1481 · TWX REDWOOD CITY, CAL 41 · CABLE ADDRESS: AMPEX, REDWOOD CITY

(Supersedes bulletin dated 20 March 1953)

INSTALLATION OF GATE SPRINGS IN 475 SERIES AND SIMILAR HEAD ASSEMBLIES

Should it be necessary to replace the 438-1 gate springs, the following method has proven to be the most practical:

1. Pull the drive pins at each end of the gate and remove the gate.

2. The springs are placed in the gate post with the crimped section in the slot as shown. They should be held in place with a small piece of masking tape. Be careful to keep the springs as straight as possible with reference to the gate post.

3. Push the gate assembly into place, in open position and insert the springs in the stop post slots during the process.

4. Insert the drive pins in the gate ends, leaving about 1/16" of the drive pins extending. Remove the masking tape.

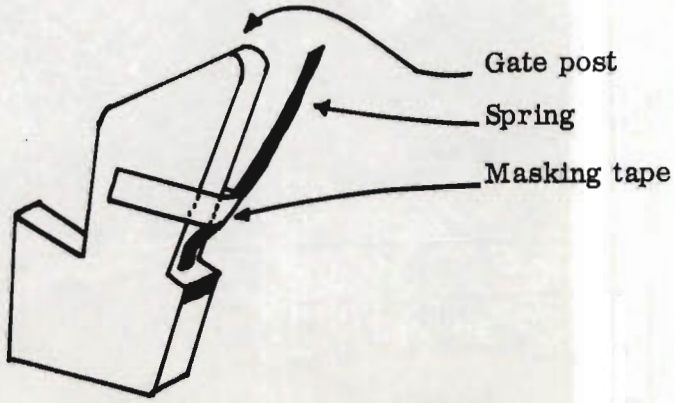

Insert following IV, P. 6